Information for Replacement of FR-V500(L) Series with FR-A800 Series & FR-A8TP

Size, connection, and parameters concerning replacement are stated on the following pages.

Specifications are subject to change without prior notice.

1. REPLACING INVERTER

The FR-A800 series has two specifications types: FM type and CA type.
When replacing the FR-V500 series of the Japanese specifications, select the FM type (FR-A8[]0-[][]K-1).

The FR-A8TP is available for inverters with the following SERIAL number. Check the SERIAL number indicated on the inverter rating plate or package.

Rating plate example

□ ○ ○ ○○○○○○

Symbol Year Month Control number

The SERIAL consists of one symbol, two characters indicating the production year and month, and six characters indicating the control number.
The last digit of the production year is indicated as the Year, and the Month is indicated by 1 to 9, X (October), Y (November), or Z (December).

Model	SERIAL
FR-A820-0.4K to 90K FR-A840-0.4K to 280K	□51○○○○○○ or later

2. SIZE

When the FR-V500 series is replaced with the FR-A800 series, some FR-A800 series models have different installation size from that of the corresponding FR-V500 series models.
Refer to the applicable outline dimension and drill new mounting holes, or use the installation interchange attachment shown in the table below.

Existing inverter	Replacing inverter	Installation size / installation interchange attachment
FR-V520-1.5K	FR-A820-2.2K	Same
FR-V520-2.2K	FR-A820-3.7K	Same
FR-V520-3.7K	FR-A820-5.5K	Same
FR-V520-5.5K	FR-A820-7.5K	Same
FR-V520-7.5K	FR-A820-11K	Different size
FR-V520-11K	FR-A820-15K	Same
FR-V520-15K	FR-A820-18.5K	Same
FR-V520-18.5K	FR-A820-22K	FR-A5AT04
FR-V520-22K	FR-A820-30K	Same installation size, different outline dimension.
FR-V520-30K	FR-A820-37K	Same installation size, different outline dimension.
FR-V520-37K	FR-A820-45K	Same installation size, different outline dimension.
FR-V520-45K	FR-A820-55K	Same installation size, different outline dimension.
FR-V520-55K	FR-A820-75K	Different size
FR-V520L-75K	FR-A820-90K	Different size
FR-V540-1.5K	FR-A840-2.2K	Same
FR-V540-2.2K	FR-A840-3.7K	Same
FR-V540-3.7K	FR-A840-5.5K	Same
FR-V540-5.5K	FR-A840-7.5K	Same
FR-V540-7.5K	FR-A840-11K	FR-AAT24
FR-V540-11K	FR-A840-15K	FR-AAT24
FR-V540-15K	FR-A840-18.5K	Same
FR-V540-18.5K	FR-A840-22K	Same
FR-V540-22K	FR-A840-30K	Same installation size, different outline dimension.
FR-V540-30K	FR-A840-37K	Same installation size, different outline dimension.
FR-V540-37K	FR-A840-45K	Same installation size, different outline dimension.
FR-V540-45K	FR-A840-55K	FR-A5AT05
FR-V540-55K	FR-A840-75K	Different size
FR-V540L-75K	FR-A840-90K	Different size
FR-V540L-90K	FR-A840-110K	Different size
FR-V540L-110K	FR-A840-132K	Different size
FR-V540L-132K	FR-A840-160K	Different size
FR-V540L-160K	FR-A840-185K	Different size
FR-V540L-200K	FR-A840-220K	Different size
FR-V540L-250K	FR-A840-280K	Different size

*1 A separate power supply of 5 V / 12 V / 15 V is necessary according to the encoder power specification for vector control of the FR-A800 series.

*2 For the FR-A800 series, the initial setting of control method is V/F control. Change parameters for the vector control setting.

*3 The SF-V5RU-H2K or H3K motor can be driven by the FR-A800 inverters whose capacity is equal to that of the FR-V500 inverters.
The installation size is the same for 2.2K inverters between the FR-V500 series and the FR-A800 series.
3.7K inverters can be replaced using the FR-AAT22.

Rated current value

The following shows the rated current values of the FR-V500 inverters and the FR-A800 (ND rated) inverters. When compared between the same capacities of the both series, the rated current value of the FR-V500 series is larger than that of the FR-A800 series.

When the FR-V500 series is replaced with the FR-A800 series, use a FR-A800 series inverter which has a capacity one-rank higher than that of the FR-V500 series inverter.

However, when the SF-V5RU-H2K or H3K motor is used, use the inverter with the same capacity rank as the rated motor current is within the inverter rated current.

Comparison table for rated current value

Three-phase 200 V

Capacity	1.5K	2.2K	3.7K	5.5K	7.5K	11K	15K	18.5K	22K	30K	37K	45K	55K
V520	9 A	13 A	20 A	28.5 A	37.5 A	54 A	72.8 A	88.0 A	103.5 A	126.5 A	168 A	198 A	264 A
A820	8 A	11 A	17.5 A	24 A	33 A	46 A	61 A	76 A	90 A	115 A	145 A	175 A	215 A

Capacity	75K	90K
V520L	330 A	–
A820	288 A	346 A

Three-phase 400 V

Capacity	1.5K	2.2K	3.7K	5.5K	7.5K	11K	15K	18.5K	22K	30K	37K	45K	55K
V540	4.5 A	6.5 A	10 A	14.5 A	18.5 A	27.5 A	35.5 A	44 A	51.8 A	67 A	86 A	99 A	132 A
A840	4 A	6 A	9 A	12 A	17 A	23 A	31 A	38 A	44 A	57 A	71 A	86 A	110 A

Capacity	75K	90K	110K	132K	160K	185A	200K	220K	250K	280K
V540L	165 A	195 A	240 A	270 A	330 A	–	415 A	–	505 A	–
A840	144 A	180 A	216 A	260 A	325 A	361 A	–	432 A	481 A	547 A

Outline dimension drawings (Unit: mm)

■ FR-V520-1.5K, 2.2K

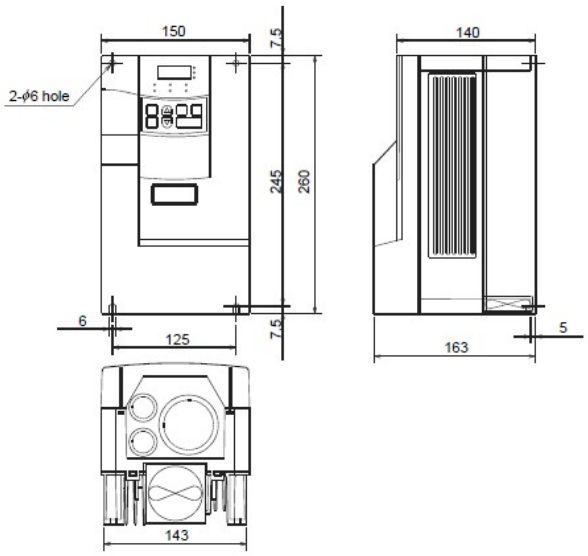

■ FR-V520-3.7K, 5.5K

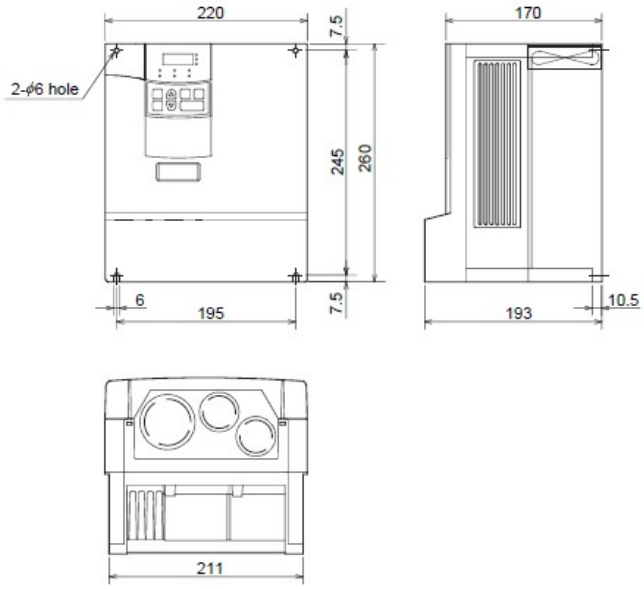

■ FR-A820-2.2K, 3.7K

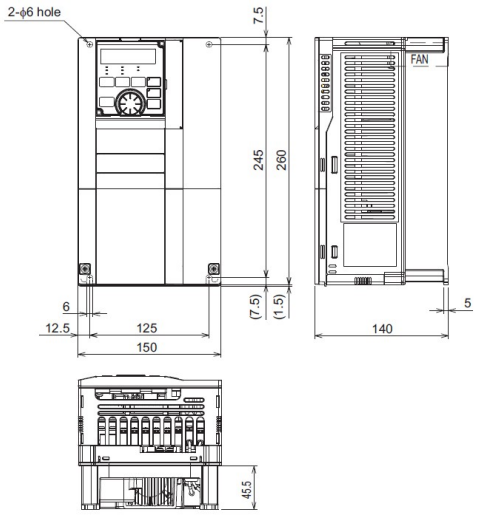

■ FR-A820-5.5K, 7.5K

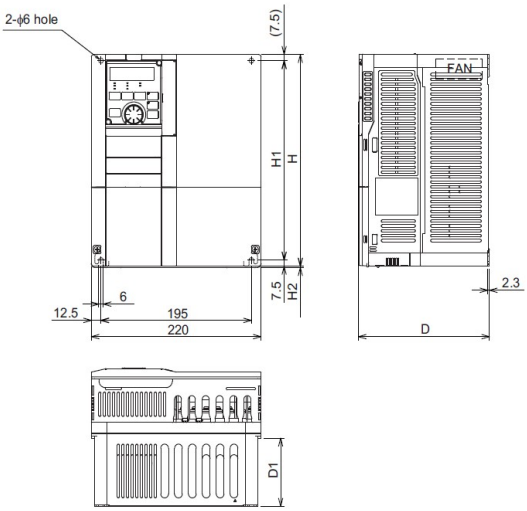

Inverter model	H	H1	H2	D	D1
FR-A820-5.5K, 7.5K	260	245	1.5	170	84

■ FR-V520-7.5K

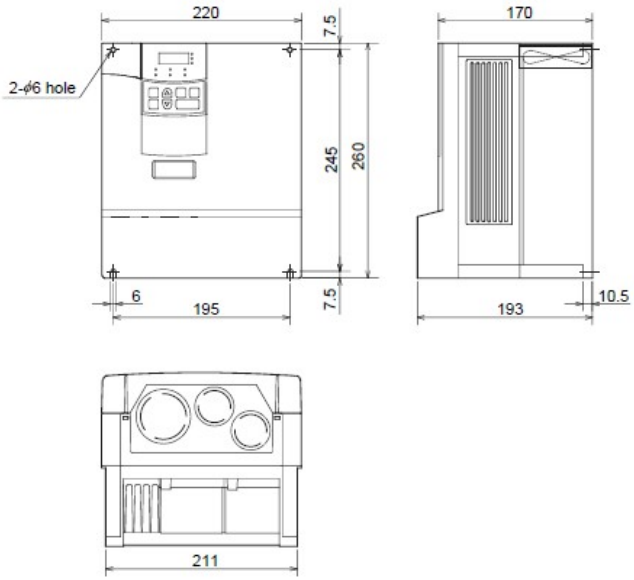

■ FR-V520-11K, 15K

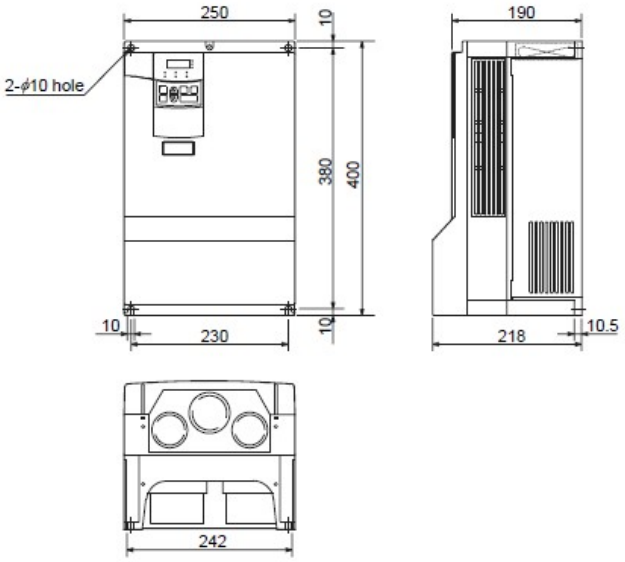

■ FR-A820-11K

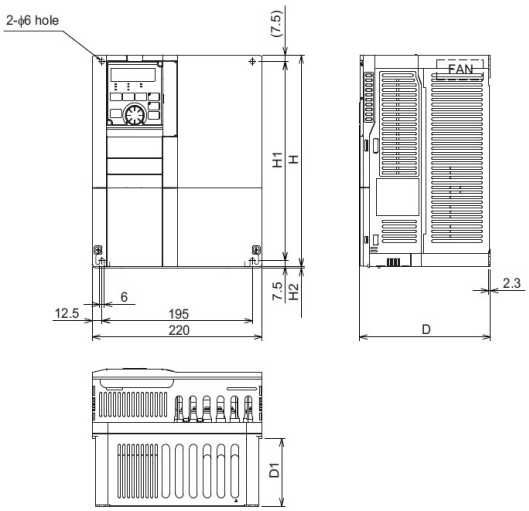

Inverter model	H	H1	H2	D	D1
FR-A820-11K	300	285	3	190	101.5

■ FR-A820-15K, 18.5K

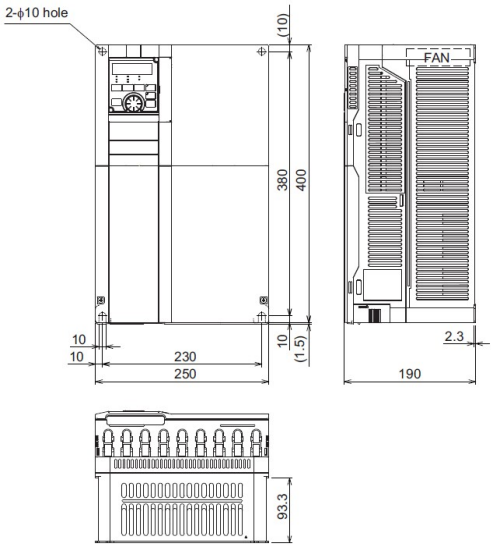

■ FR-V520-18.5K

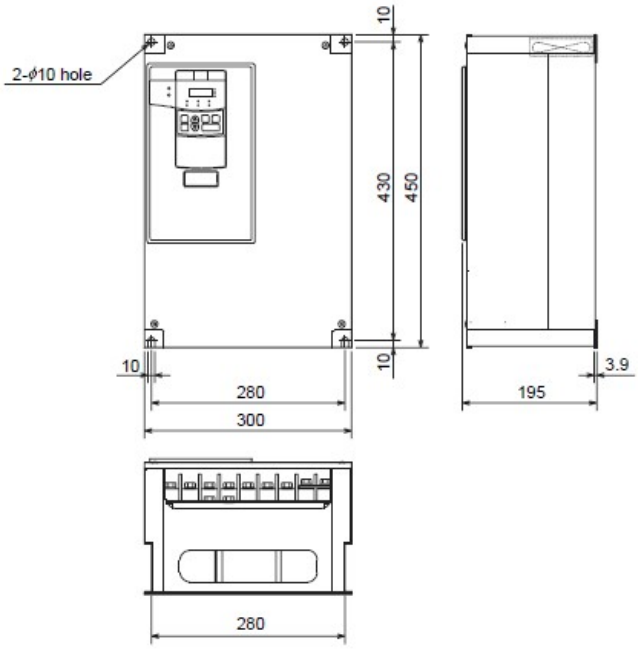

■ FR-A820-22K

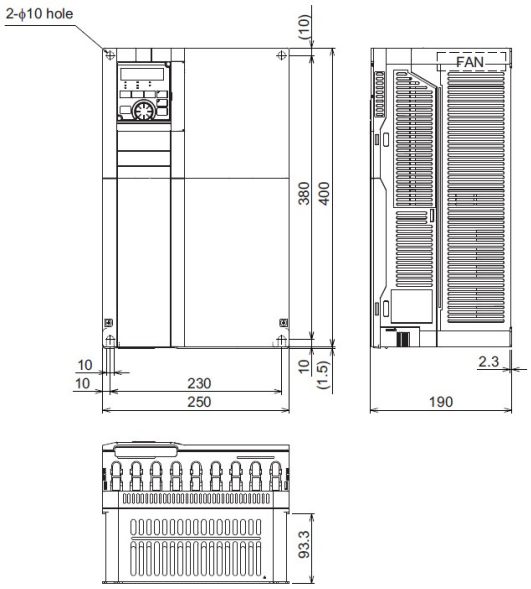

■ FR-V520-22K

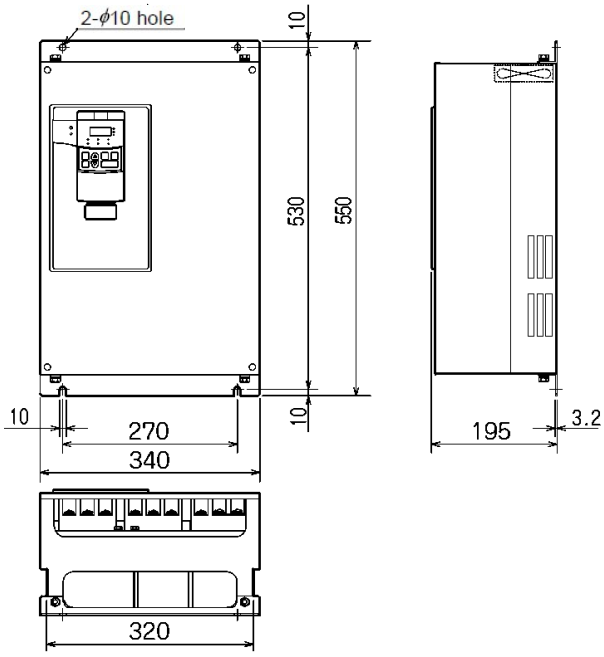

■ FR-A820-30K

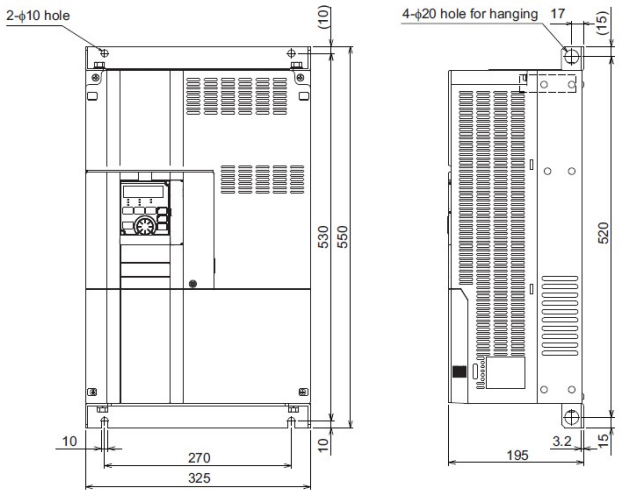

■ FR-V520-30K, 37K

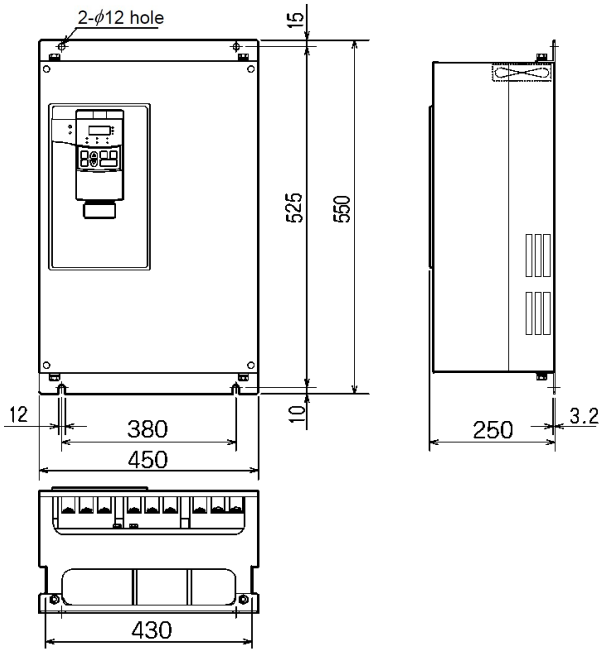

■ FR-A820-37K, 45K

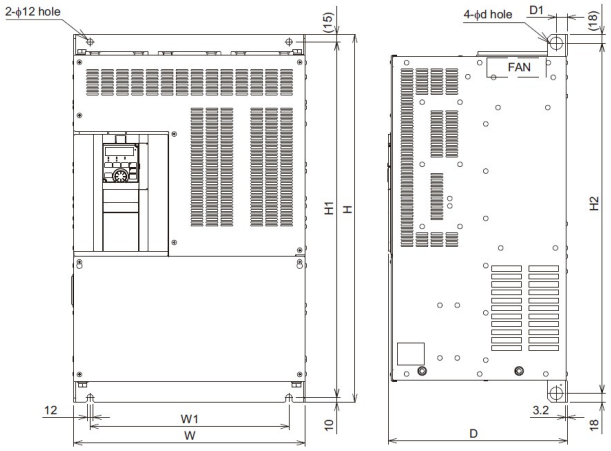

Inverter model	W	W1	H	H1
FR-A820-37K, 45K	435	380	550	525

Inverter model	H2	d	D	D1
FR-A820-37K, 45K	514	25	250	24

■ FR-V520-45K

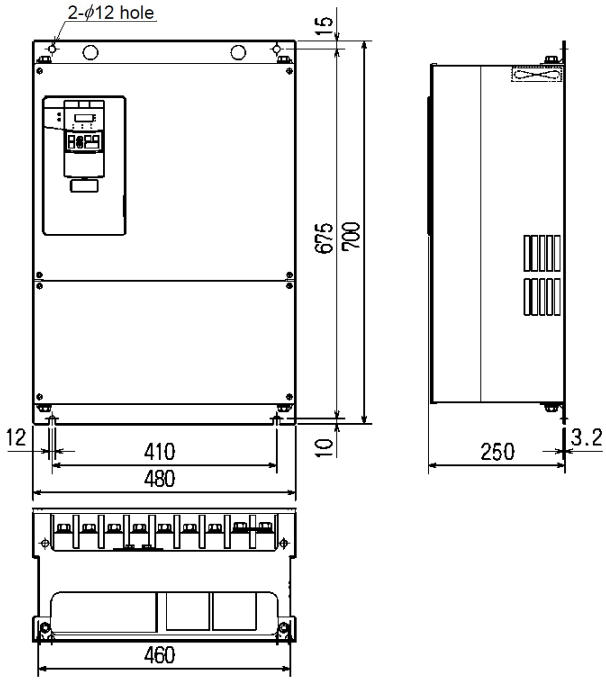

■ FR-A820-55K

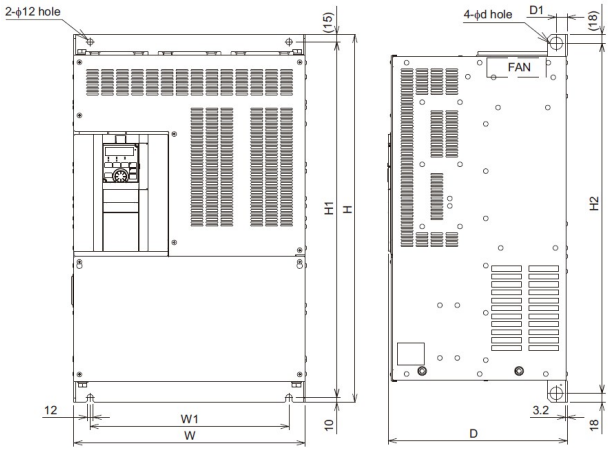

Inverter model	W	W1	H	H1
FR-A820-55K	465	410	700	675

Inverter model	H2	d	D	D1
FR-A820-55K	664	25	250	22

■ FR-V520-55K

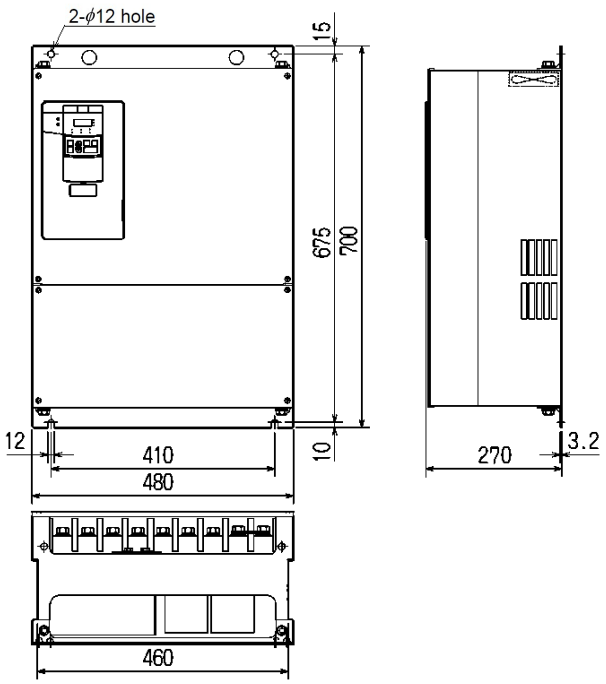

■ FR-A820-75K

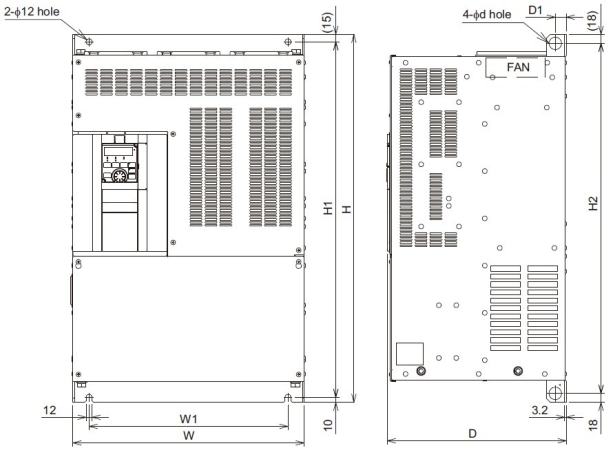

Inverter model	W	W1	H	H1
FR-A820-75K	465	400	740	715

Inverter model	H2	d	D	D1
FR-A820-75K	704	24	360	22

[DC reactor FR-HEL-55K]

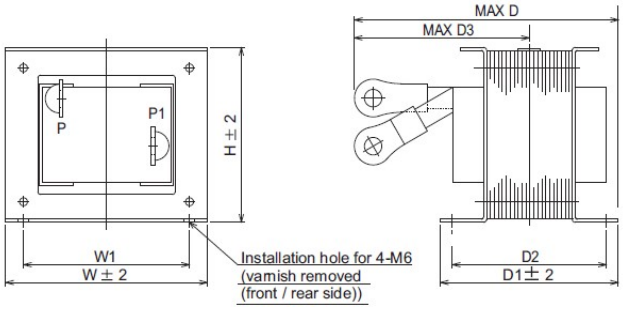

W	W1	H	D	D1	D2	D3
153	126	132	209	135	122	140

■ FR-V520L-75K

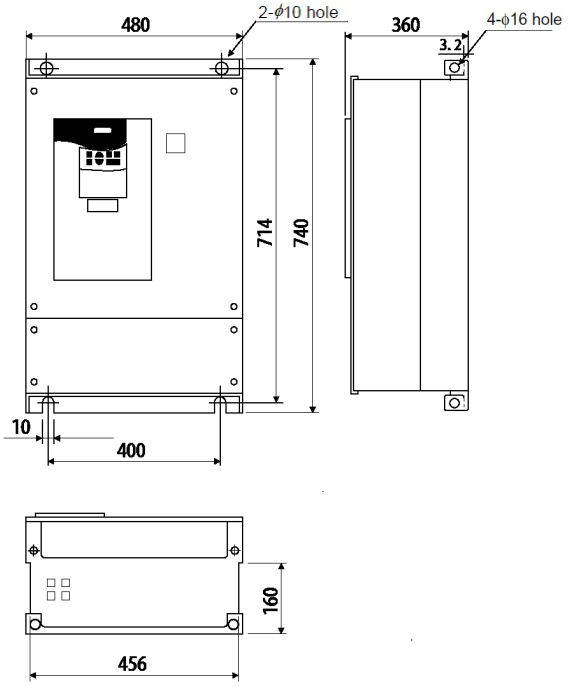

■ FR-A820-90K

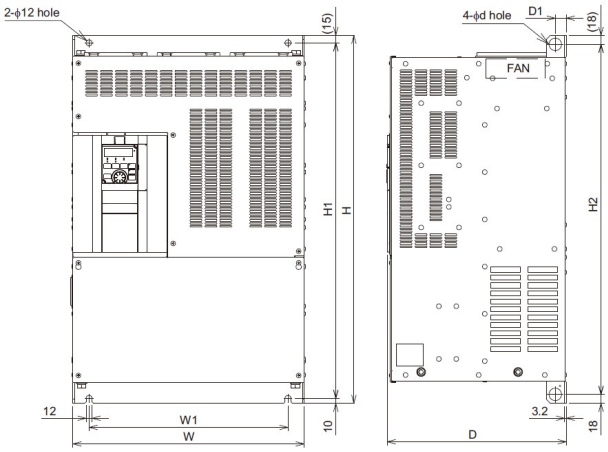

Inverter model	W	W1	H	H1
FR-A820-90K	465	400	740	715

Inverter model	H2	d	D	D1
FR-A820-90K	704	24	360	22

[Accessory DC reactor]

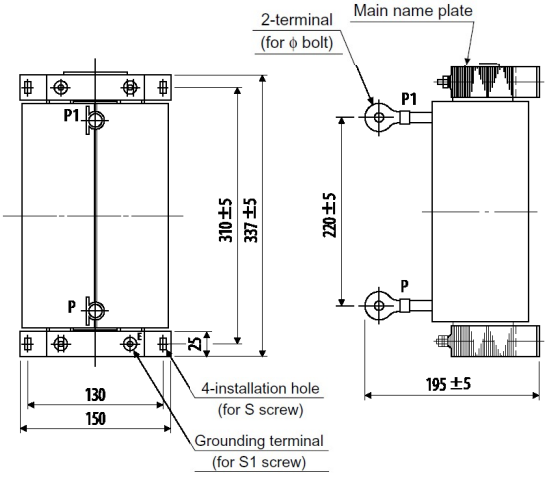

S	S1	ϕ
M6	M6	M12

[DC reactor FR-HEL-75K]

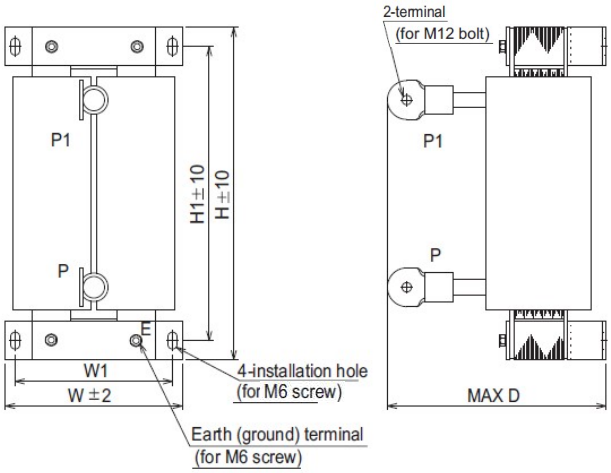

■ FR-V540-1.5K, 2.2K

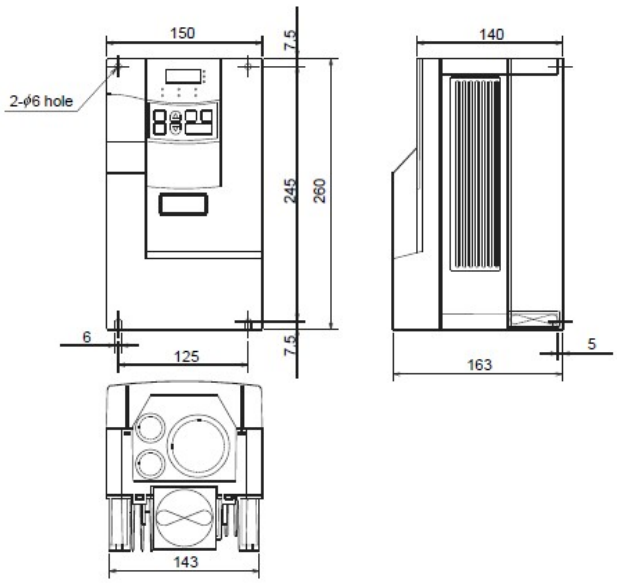

■ FR-A840-2.2K, 3.7K

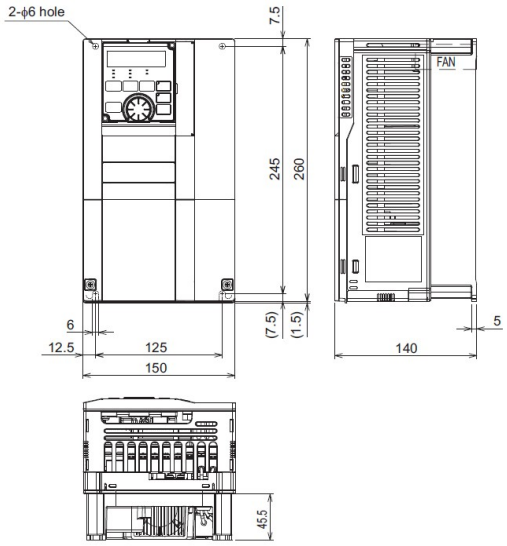

■ FR-V540-3.7K

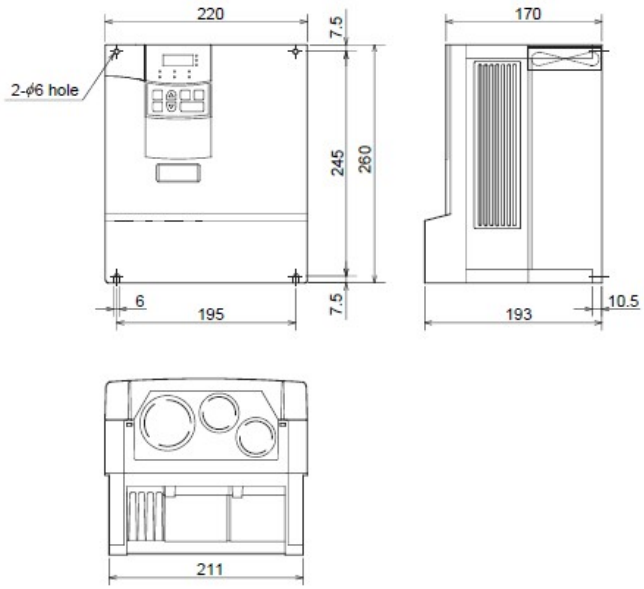

■ FR-A840-5.5K

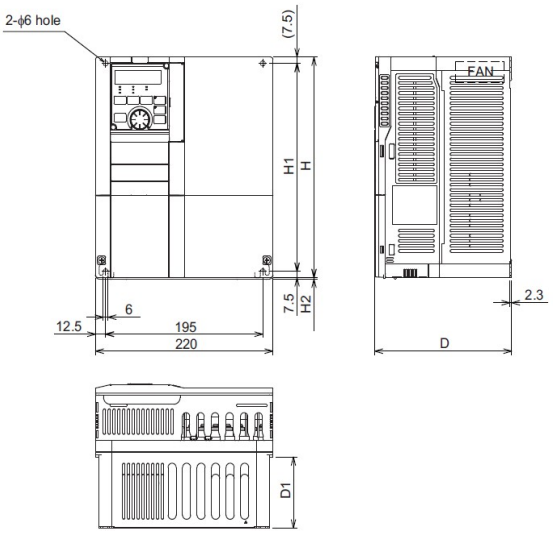

Inverter model	H	H1	H2	D	D1
FR-A840-5.5K, 7.5K	260	245	1.5	170	84

■ FR-V540-5.5K

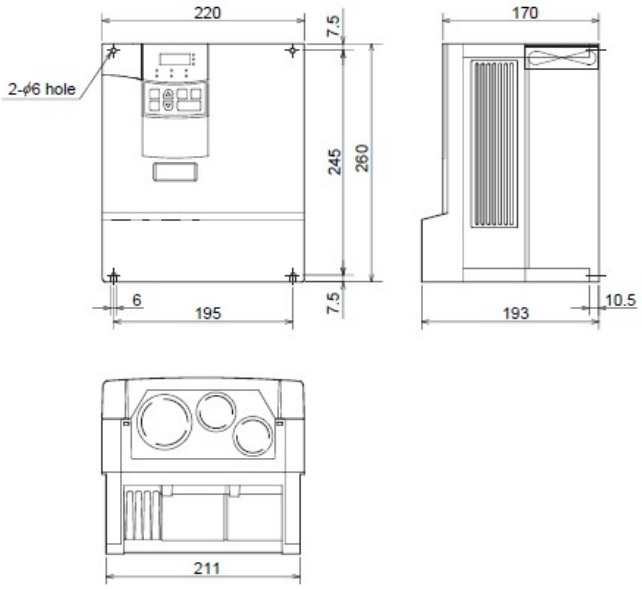

■ FR-A840-7.5K

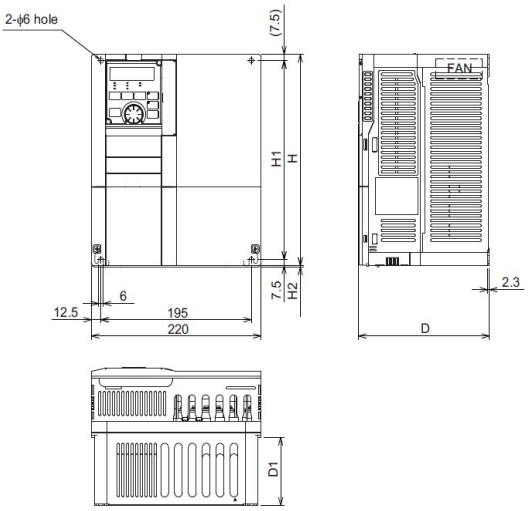

Inverter model	H	H1	H2	D	D1
FR-A840-5.5K, 7.5K	260	245	1.5	170	84

■ FR-V540-7.5K, 11K

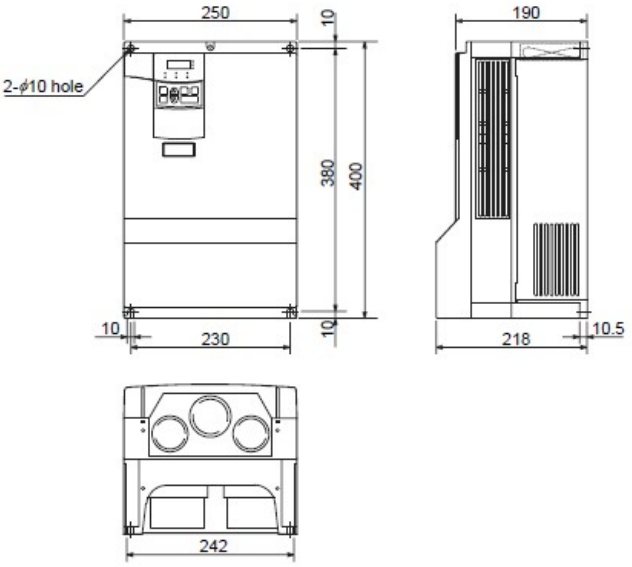

■ FR-A840-11K, 15K

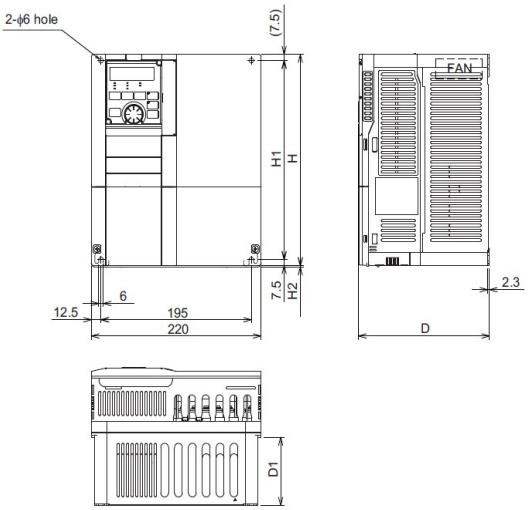

Inverter model	H	H1	H2	D	D1
FR-A840-11K, 15K	300	285	3	190	101.5

■ FR-V540-15K, 18.5K

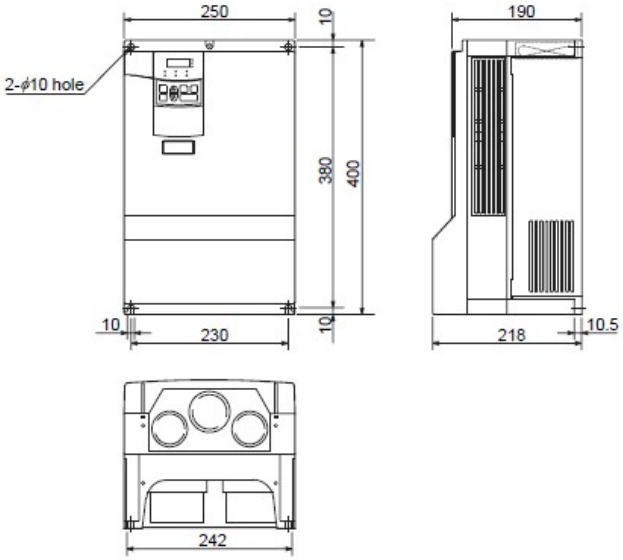

■ FR-A840-18.5K, 22K

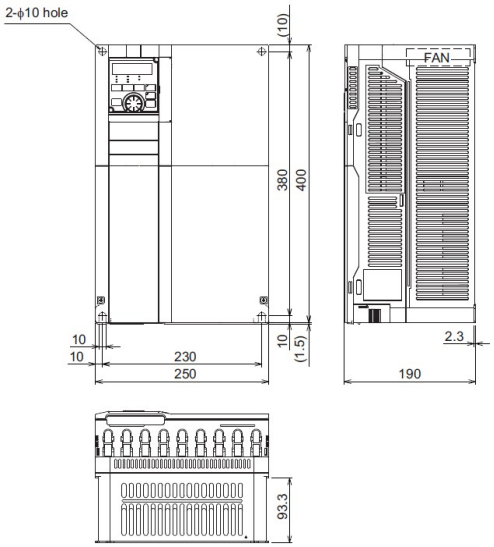

■ FR-V540-22K

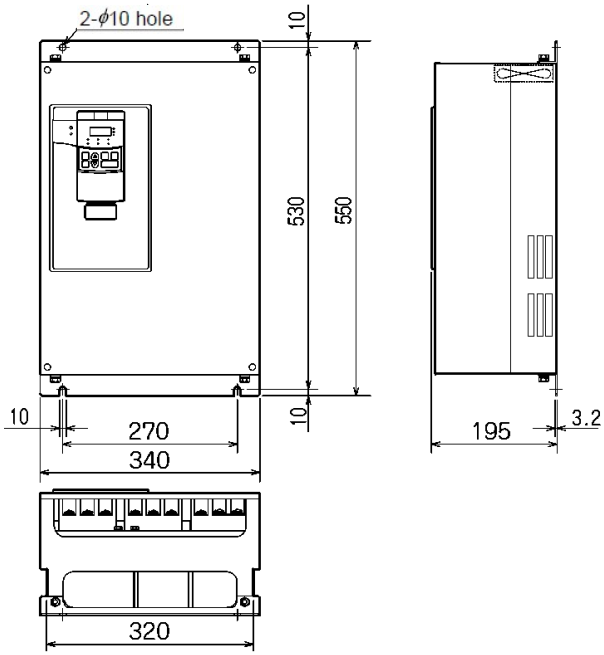

■ FR-A840-30K

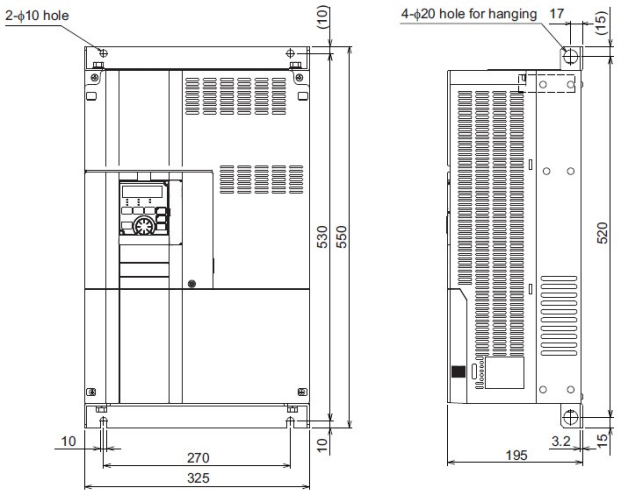

■ FR-V540-30K, 37K

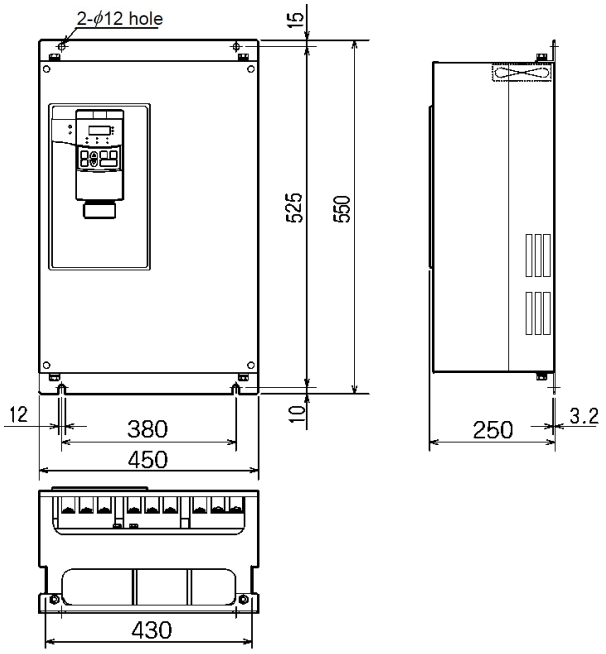

■ FR-V540-45K

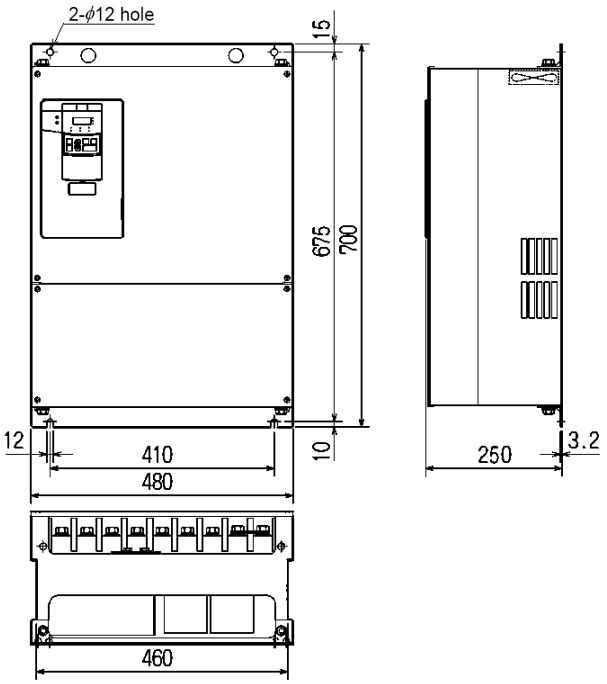

■ FR-A840-37K, 45K

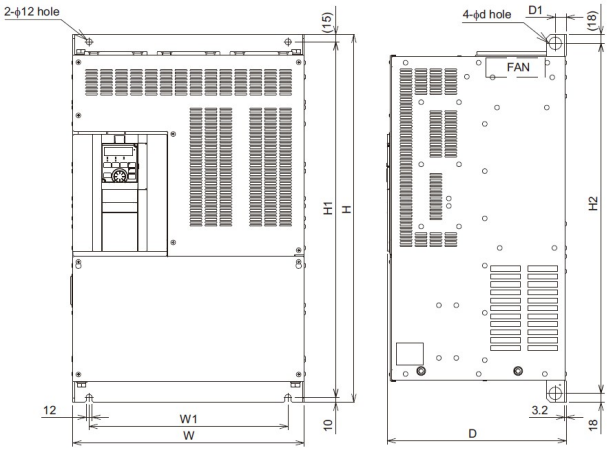

Inverter model	W	W1	H	H1
FR-A840-37K, 45K,	435	380	550	525

Inverter model	H2	d	D	D1
FR-A840-37K, 45K	514	25	250	24

■ FR-A840-55K

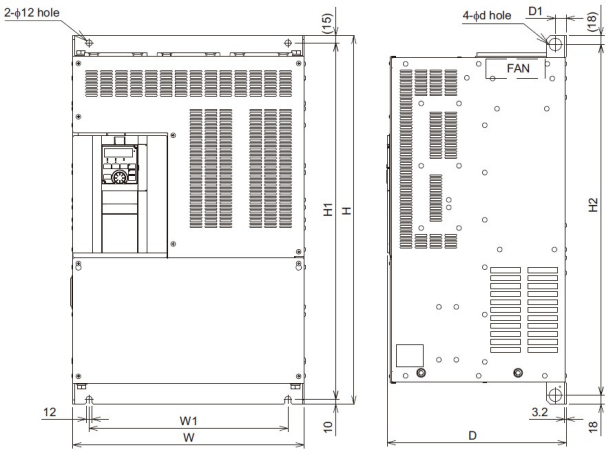

Inverter model	W	W1	H	H1
FR-A840-55K	435	380	550	525

Inverter model	H2	d	D	D1
FR-A840-55K	514	25	250	24

■ FR-V540-55K

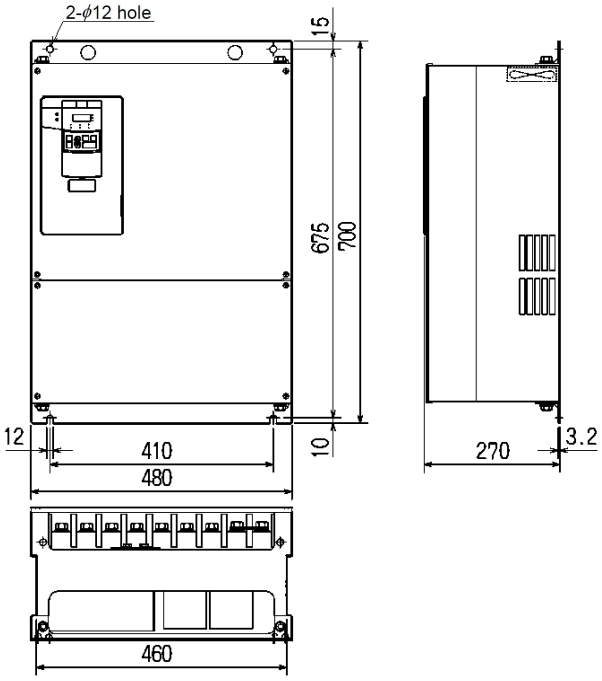

■ FR-A840-75K

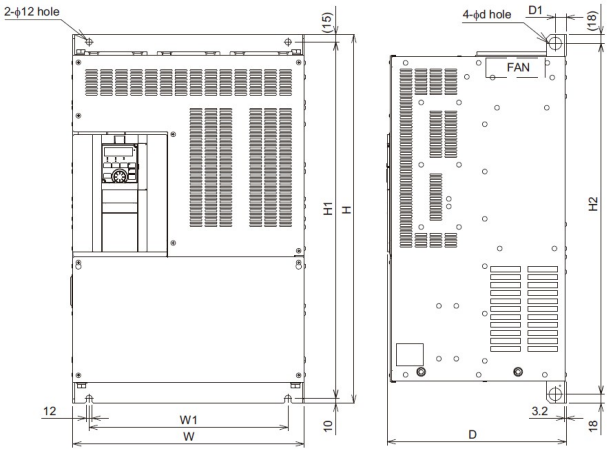

Inverter model	W	W1	H	H1
FR-A840-75K	465	400	620	595

Inverter model	H2	d	D	D1
FR-A840-75K	584	24	300	22

[DC reactor FR-HEL-H55K]

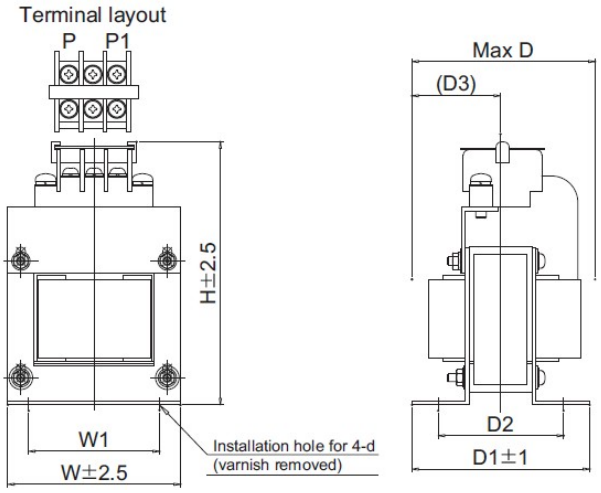

W	W1	H	D	D1	D2	D3	d
152	105	206	170	126	106	89	M6

■ FR-V540L-75K

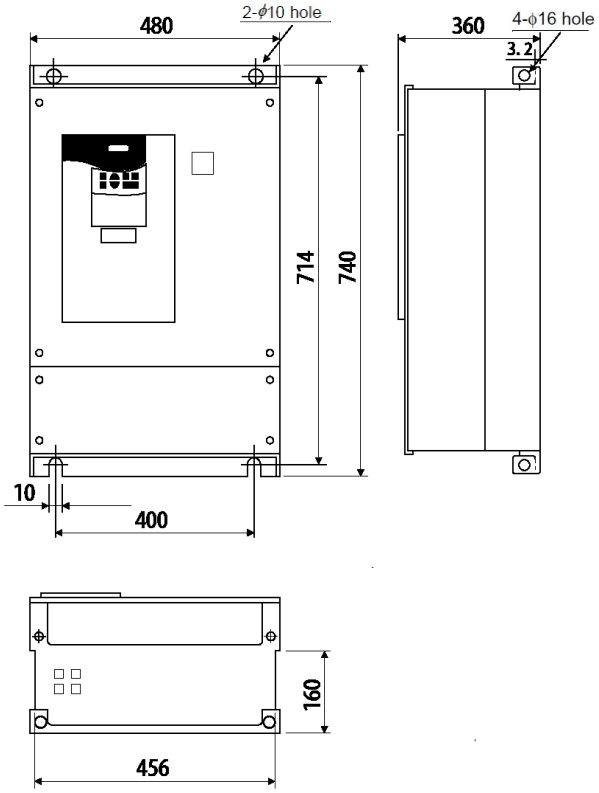

■ FR-A840-90K

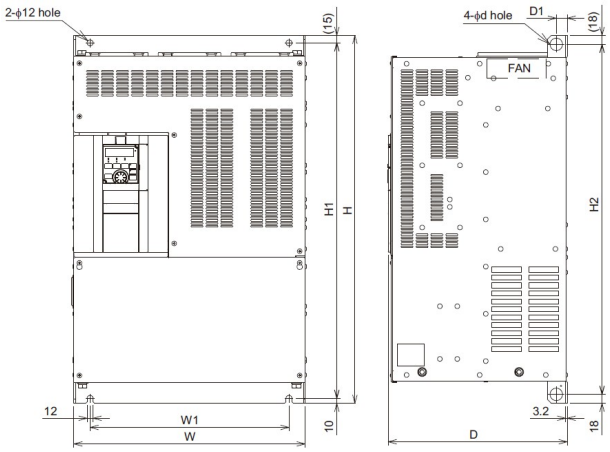

Inverter model	W	W1	H	H1
FR-A840-90K	465	400	620	595

Inverter model	H2	d	D	D1
FR-A840-90K	584	24	300	22

[Accessory DC reactor]

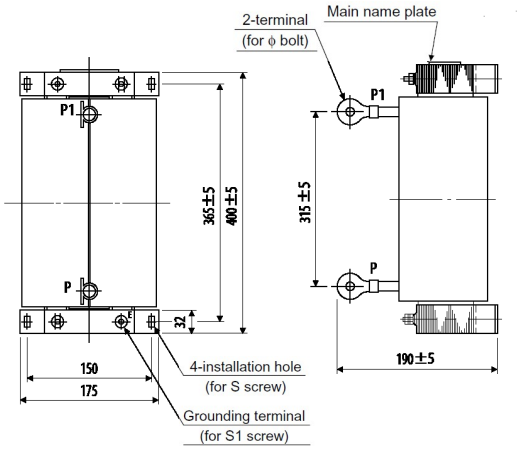

S	S1	ϕ
M8	M6	M12

[DC reactor FR-HEL-H75K]

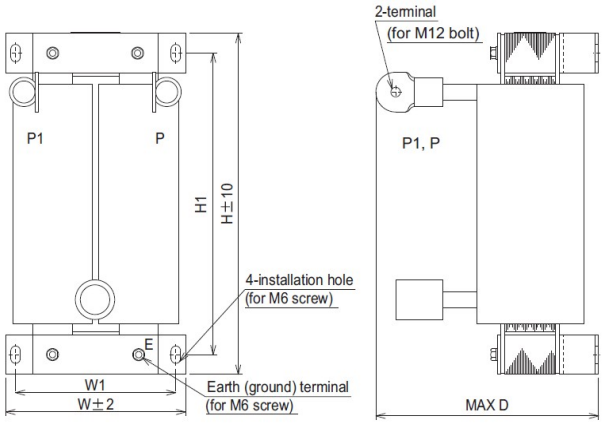

W	W1	H	H1	D
140	120	320	295	185

■ FR-V540L-90K

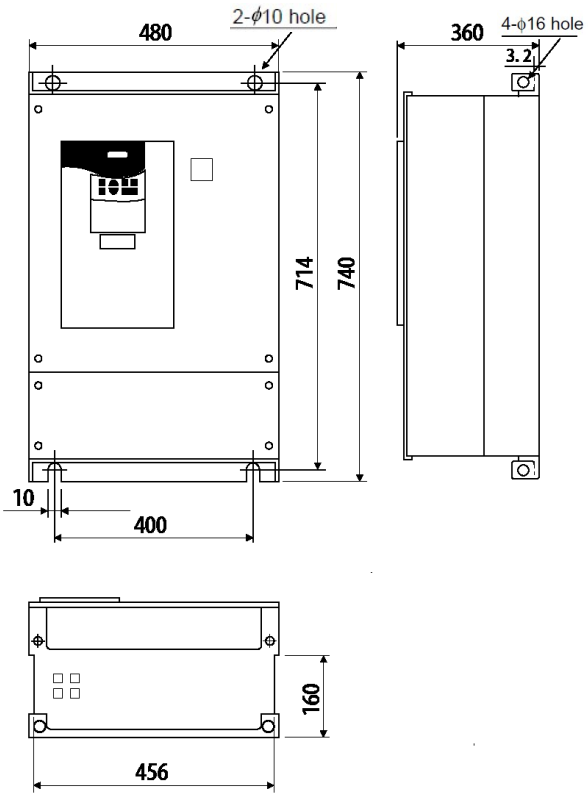

■ FR-A840-110K

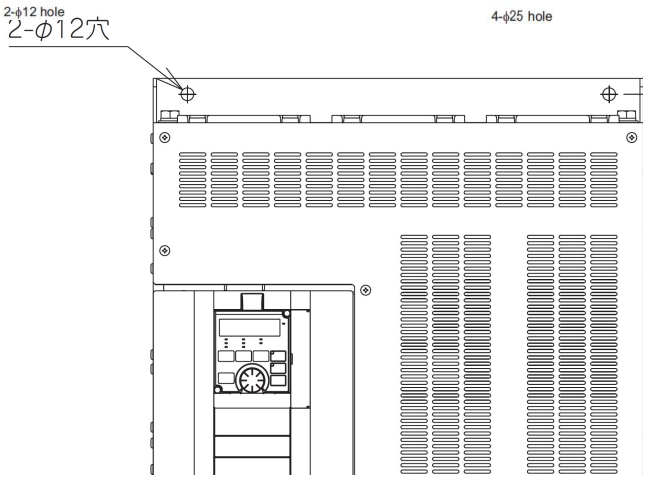

[Accessory DC reactor]

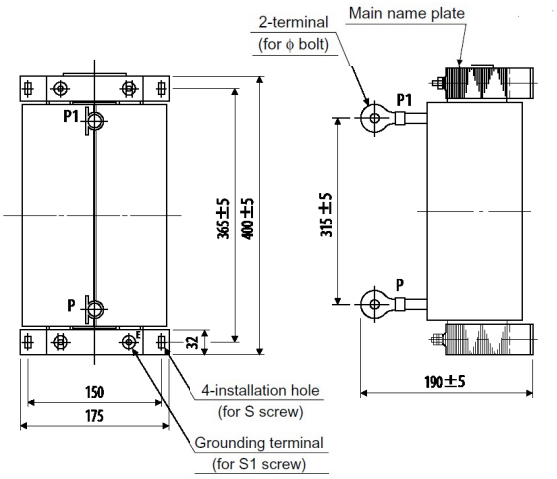

S	S1	φ
M8	M6	M12

[DC reactor FR-HEL-H90K]

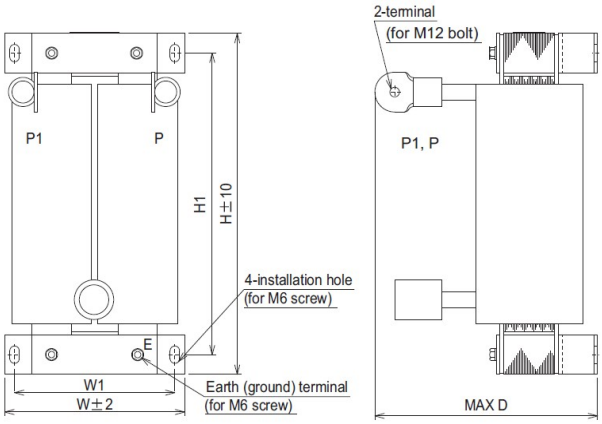

W	W1	H	H1	D
150	130	340	310	190

■ FR-V540L-110K

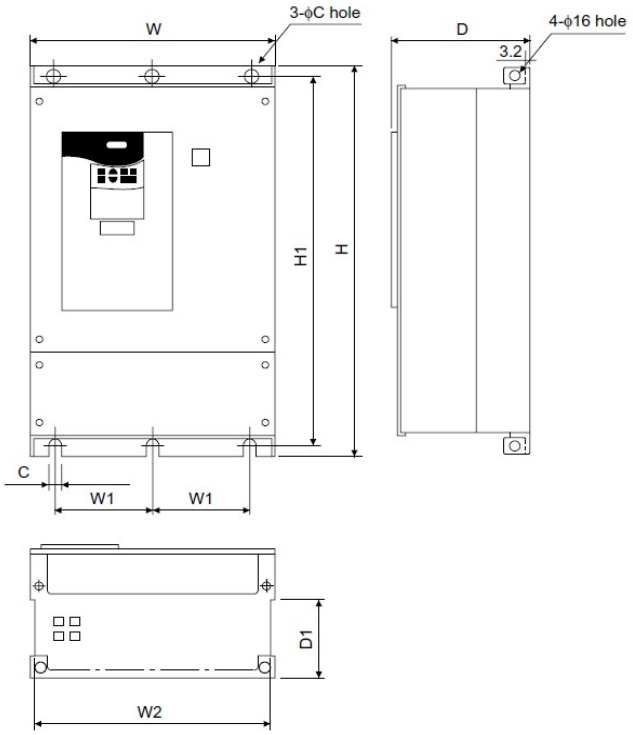

Inverter model	W	W1	W2	H	H1	D	D1	C
FR-V540L-110K	498	200	474	1010	984	380	185	10

■ FR-A840-132K

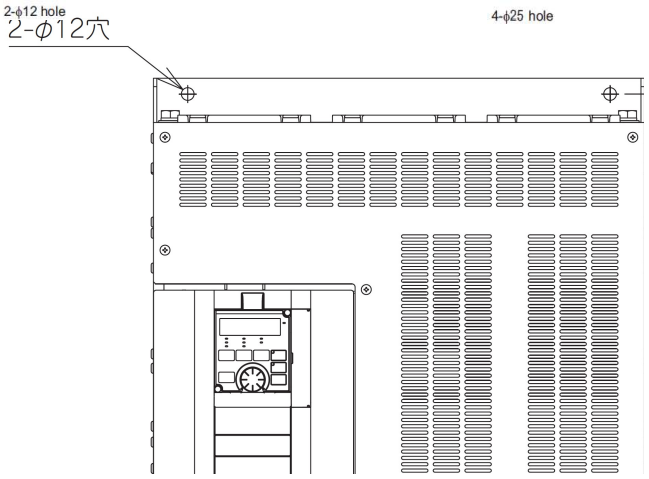

[Accessory DC reactor]

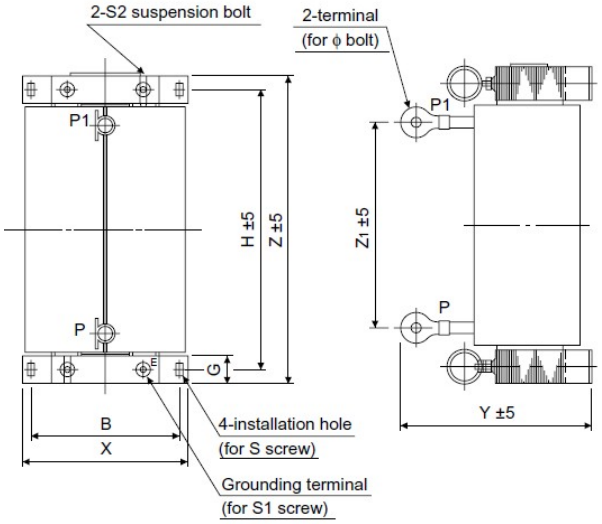

X	Y	Z	Z1	B	H	G
190	225	438	305	165	400	38

S	S1	S2	ϕ
M8	M8	M8	M12

[DC reactor FR-HEL-H110K]

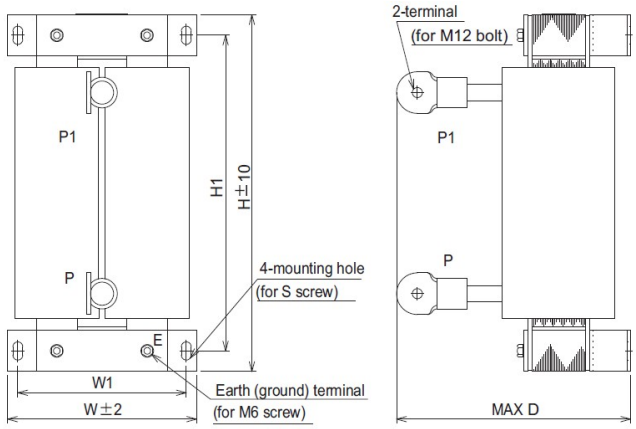

W	W1	H	H1	D	S
150	130	340	310	195	M6

■ FR-V540L-132K

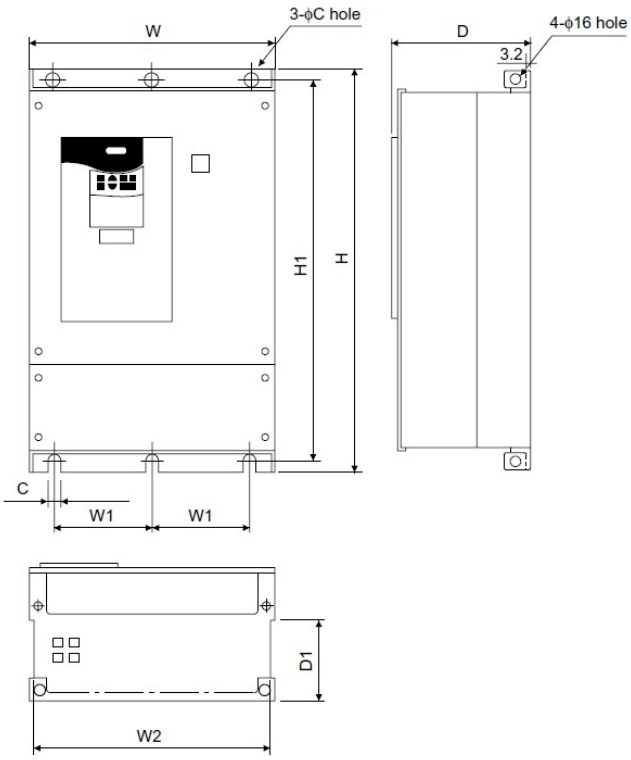

Inverter model	W	W1	W2	H	H1	D	D1	C
FR-V540L-132K	498	200	474	1010	984	380	185	10

■ FR-A840-160K

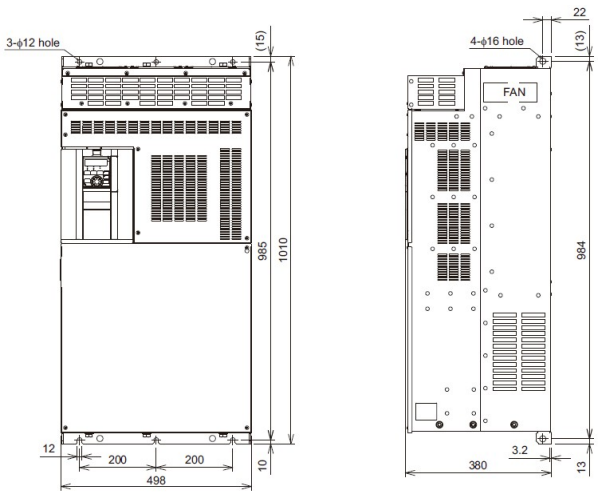

[Accessory DC reactor]

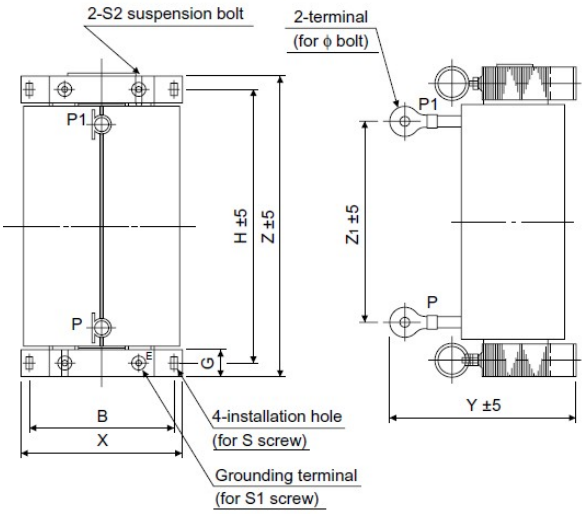

X	Y	Z	Z1	B	H	G
190	225	438	305	165	400	38

S	S1	S2	ϕ
M8	M8	M8	M12

[DC reactor FR-HEL-H132K]

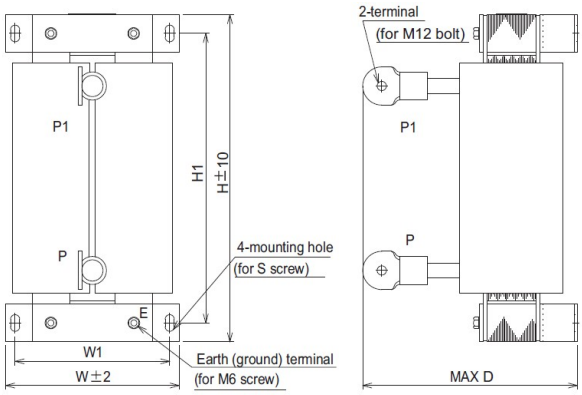

W	W1	H	H1	D	S
175	150	405	370	200	M8

■ FR-V540L-160K

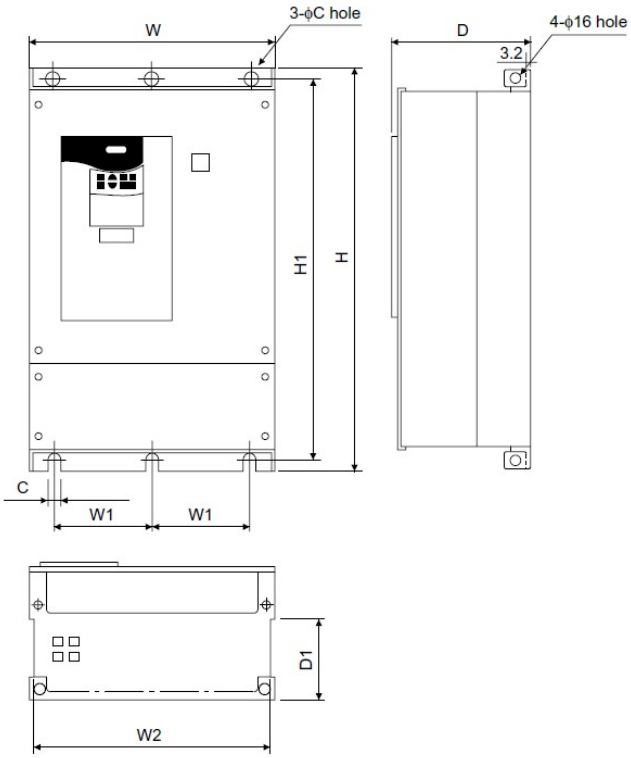

Inverter model	W	W1	W2	H	H1	D	D1	C
FR-V540L-160K	680	300	656	1010	984	380	185	10

■ FR-A840-185K

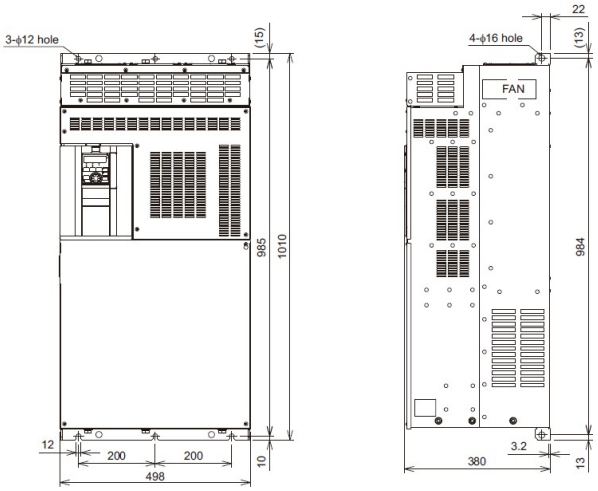

[Accessory DC reactor]

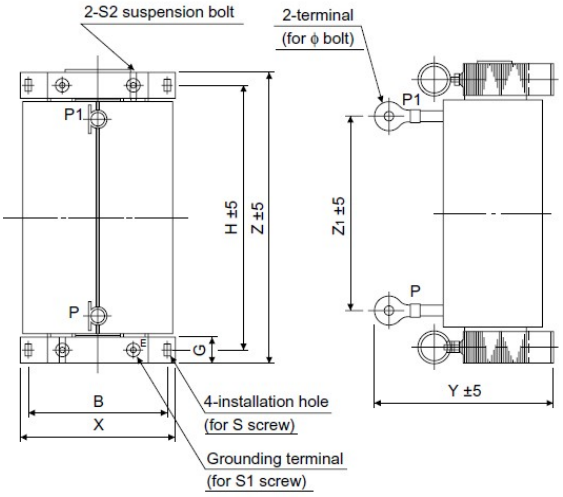

X	Y	Z	Z1	B	H	G
210	235	495	350	185	450	44

S	S1	S2	ϕ
M10	M8	M8	M16

[DC reactor FR-HEL-H160K]

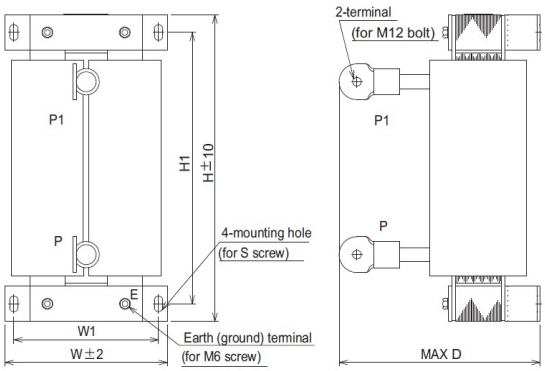

W	W1	H	H1	D	S
175	150	405	370	205	M8

■ FR-V540L-200K

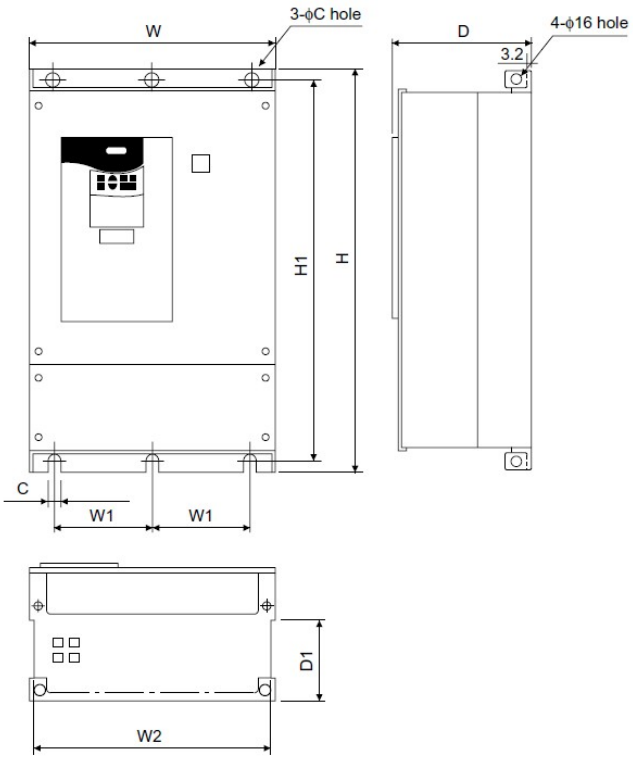

Inverter model	W	W1	W2	H	H1	D	D1	C
FR-V540L-200K	790	315	766	1330	1300	440	196	12

■ FR-A840-220K

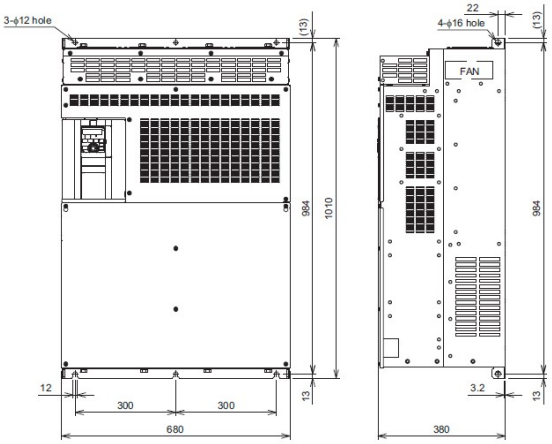

[Accessory DC reactor]

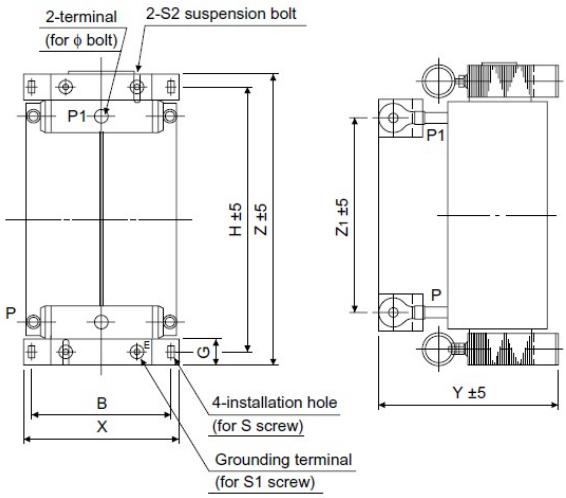

X	Y	Z	Z1	B	H	G
220	250	495	380	195	450	44

S	S1	S2	ϕ
M10	M8	M8	M16

[DC reactor FR-HEL-H220K]

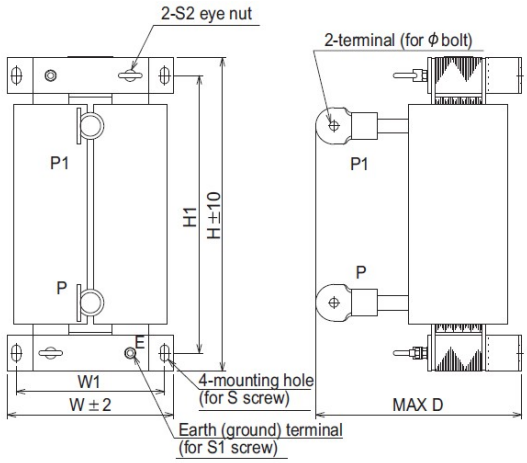

W	W1	H	H1	D	S	S1	S2	ϕ
175	150	405	370	240	M8	M6	M6	M12

■ FR-V540L-250K

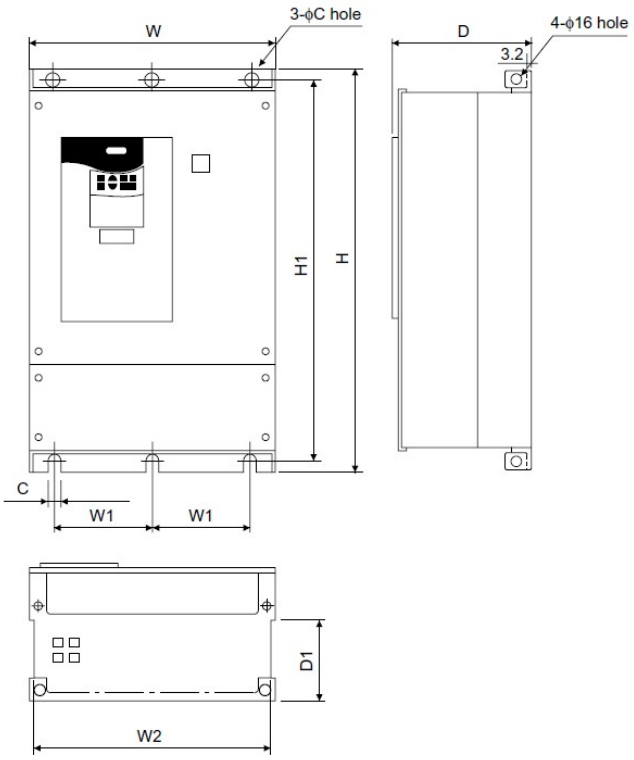

Inverter model	W	W1	W2	H	H1	D	D1	C
FR-V540L-250K	790	315	766	1330	1300	440	196	12

■ FR-A840-280K

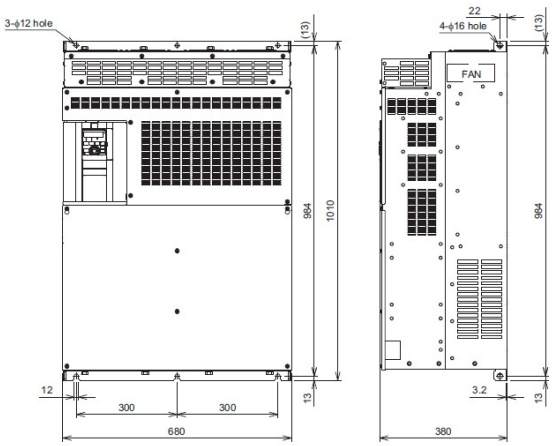

[Accessory DC reactor]

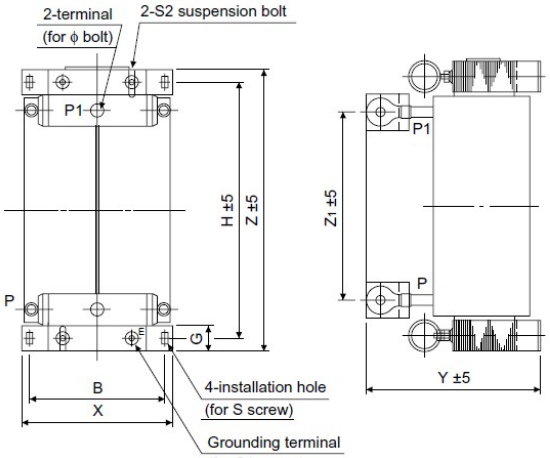

X	Y	Z	Z1	B	H	G
220	250	495	380	195	450	44

S	S1	S2	ϕ
M10	M8	M8	M16

[DC reactor FR-HEL-H250K]

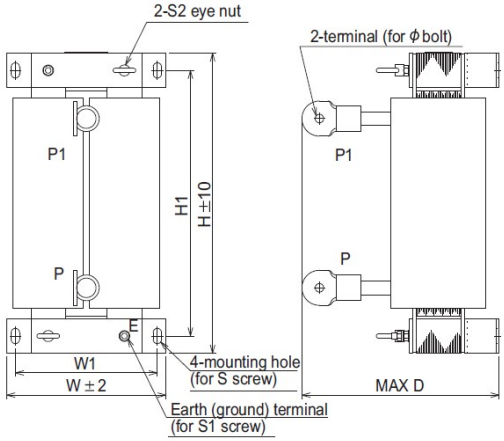

W	W1	H	H1	D	S	S1	S2	ϕ
190	165	440	400	250	M8	M8	M8	M12

3. CONNECTION

The terminal names are basically the same. Connect the terminals according to their names.

Type		V500 terminal name	A800/A8TP compatible terminal name	Remarks
Main circuit		R, S, T	R/L1, S/L2, T/L3	
		U, V, W	U, V, W	
		R1, S1	R1/L11, S1/L21	
		P, PR	P/+, PR P3, PR *1	
		P, N	P/+, N/- P3, N/- *2	
		P, P1	P/+, P1	
		PR, PX	PR, PX	
		⏚	⏚	
Control circuit/input signal	Contact	STF	STF	Use Pr.178 to Pr.182 and Pr.185 to change the function of these terminals.
		STR	STR	
		DI1 (Default setting: RL)	DI1 (Default setting: RL)	
		DI2 (Default setting: RM)	DI2 (Default setting: RM)	
		DI3 (Default setting: RH)	DI3 (Default setting: RH)	
		DI4 (Default setting: RT)	DI4 (Default setting: RT)	
		OH	OH	
		RES	RES	
		SD	SD	
		PC	PC	
Analog	Frequency setting	10E	10E	
		2 (0 to 10 VDC), resolution 0.03%	2 (0 to 10 VDC), 12 bits	
		3 (±10 VDC), resolution 0.05%	–	FR-A800 does not have terminal 3. Use terminal 6 of the plug-in option FR-A8AZ (±10 VDC), 16 bits. When terminal 1 is not used, terminal 1 is available.
		1 (±10 VDC), resolution 0.05%	1 (±10 VDC), 12 bits	
		5	5	
Control circuit output signal	Contact	A, B, C	A1, B1, C1	
	Open collector	DO1 (Default setting: RUN)	DO1 (Default setting: RUN)	Use Pr.190 to Pr.192 to change the function of these terminals.
		DO2 (Default setting: SU)	DO2 (Default setting: SU)	
		DO3 (Default setting: IPF)	DO3 (Default setting: IPF)	
		SE	SE	
	Analog	DA1 (±10 VDC) DA2 (0 to 10VDC) 12 bits	AM (±10 VDC) 8 bits	Only one terminal (AM) can be used for the analog monitor output. Use the plug-in option FR-A8AZ (±10 VDC), 12 bits, or the FR-A8AY (±10 VDC), resolution 0.015%.
Communication	RS-485	PU connector	PU connector	

*1) For the FR-A820-15K to 22K and the FR-A840-18.5K to 22K, connect the brake resistor between P3 and PR.
*2) For the FR-A820-15K to 22K and the FR-A840-18.5K to 22K, connect the brake unit between P3 and N/-.

Terminal size

[Main circuit terminals: Three-phase 200 V]

Voltage class	FR-V520(L)							FR-A820						
	Capacity	R, S, T	U, V, W	P, N, P1	R1, S1	PR	⏚	Capacity	R/L1, S/L2, T/L3	U, V, W	P/+, N/-, P1	R1, S1	PR	⏚
Three-phase 200 V	1.5K	M4	M4	M4	M4	M4	M4	2.2K	M4	M4	M4	M4	M4	M4
	2.2K	M4	M4	M4	M4	M4	M4	3.7K	M4	M4	M4	M4	M4	M4
	3.7K	M5	M5	M5	M4	M5	M5	5.5K	M5	M5	M5	M4	M4	M5
	5.5K	M5	M5	M5	M4	M5	M5	7.5K	M5	M5	M5	M4	M4	M5
	7.5K	M5	M5	M5	M4	M5	M5	11K	M5	M5	M5	M4	M5	M5
	11K	M6	M6	M6	M4	M5	M6	15K	M6	M6	M6	M4	M6	M6
	15K	M8	M8	M8	M4	M5	M6	18.5K	M8	M8	M8	M4	M8	M6
	18.5K	M8	M8	M8	M4	–	M6	22K	M8	M8	M8	M4	M8	M6
	22K	M8	M8	M8	M4	–	M6	30K	M8	M8	M8	M4	–	M6
	30K	M10	M10	M10	M4	–	M8	37K	M10	M10	M10	M4	–	M8
	37K	M10	M10	M10	M4	–	M8	45K	M10	M10	M10	M4	–	M8
	45K	M12	M12	M12	M4	–	M8	55K	M12	M12	M12	M4	–	M8
	55K	M12	M12	M12	M4	–	M8	75K	M12	M12	M12	M4	–	M8
	75K	M12	M12	M12	M4	–	M12	90K	M12	M12	M12	M4	–	M8

[Main circuit terminals: Three-phase 400 V]

Voltage class	FR-V540(L)							FR-A840						
	Capacity	R, S, T	U, V, W	P, N, P1	R1, S1	PR	⏚	Capacity	R/L1, S/L2, T/L3	U, V, W	P/+, N/-, P1	R1, S1	PR	⏚
Three-phase 400 V	1.5K	M4	M4	M4	M4	M4	M4	2.2K	M4	M4	M4	M4	M4	M4
	2.2K	M4	M4	M4	M4	M4	M4	3.7K	M4	M4	M4	M4	M4	M4
	3.7K	M4	M4	M4	M4	M4	M4	5.5K	M4	M4	M4	M4	M4	M4
	5.5K	M4	M4	M4	M4	M4	M4	7.5K	M4	M4	M4	M4	M4	M4
	7.5K	M6	M6	M6	M4	M5	M6	11K	M5	M5	M5	M4	M5	M5
	11K	M6	M6	M6	M4	M5	M6	15K	M5	M5	M5	M4	M5	M5
	15K	M6	M6	M6	M4	M5	M6	18.5K	M6	M6	M6	M4	M6	M6
	18.5K	M6	M6	M6	M4	–	M6	22K	M6	M6	M6	M4	M6	M6
	22K	M6	M6	M6	M4	–	M6	30K	M6	M6	M6	M4	–	M6
	30K	M8	M8	M8	M4	–	M8	37K	M8	M8	M8	M4	–	M8
	37K	M8	M8	M8	M4	–	M8	45K	M8	M8	M8	M4	–	M8
	45K	M8	M8	M8	M4	–	M8	55K	M8	M8	M10	M4	–	M8
	55K	M8	M8	M8	M4	–	M8	75K	M10	M10	M10	M4	–	M10
	75K	M10	M10	M10	M4	–	M10	90K	M10	M10	M10	M4	–	M10
	90K	M10	M10	M10	M4	–	M10	110K	M10	M10	M10	M4	–	M10
	110K	M12	M12	M12	M4	–	M10	132K	M10	M10	M10	M4	–	M10
	132K	M12	M12	M12	M4	–	M10	160K	M12	M12	M12	M4	–	M10
	160K	M12	M12	M12	M4	–	M10	185K	M12	M12	M12	M4	–	M10
	200K	M12	M12	M12	M4	–	M10, M20	220K	M12	M12	M12	M4	–	M10
	250K	M12	M12	M12	M4		M10, M20	280K	M12	M12	M12	M4	–	M10

[Control circuit terminals]

Terminal block screw shape at the wiring section of the control circuit terminal block

FR-V500(L)	FR-A8TP
M3.5 ⊕ screw type terminal block	Insertion type ⦸ screw terminals

The control circuit terminal layout differs between the FR-V500(L) and the FR-A8TP. Check the terminal names and positions before performing wiring.

■Control circuit terminal layout of the FR-V500(L) series

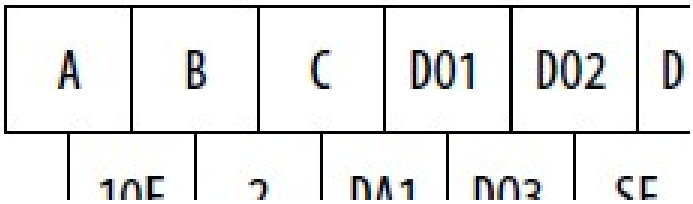

■Control circuit terminal layout of the FR-A8TP

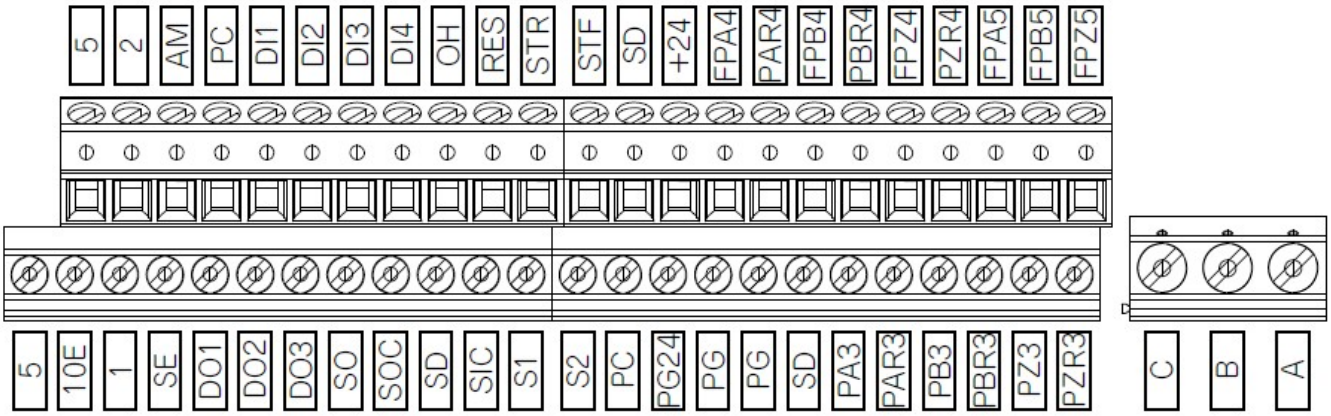

■Wire treatment

- For the control circuit wiring except for terminals related to the encoder, strip off the sheath of a cable and use as it is.
- Untwist the shielded twisted pair cables after stripping its sheath.
  Also, treat the shielding wires of the shielded twisted pair cable to ensure that they will not contact conductive areas.

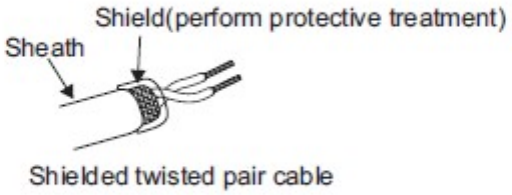

- Strip off the sheath for the below length. If the length of the sheath pealed is too long, a short circuit may occur with neighboring wires. If the length is too short, wires might come off.
  Wire the stripped cable after twisting it to prevent it from becoming loose. In addition, do not solder it.
  Use a blade terminal as necessary.

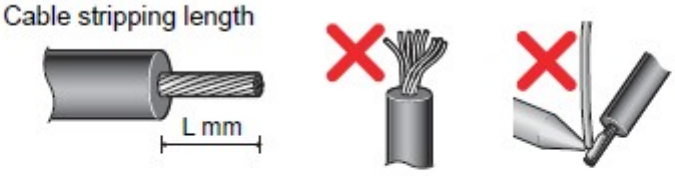

Terminal name	L (mm)
A, B, C	6
other than the above	5

Recommended cable gauge: 0.75 mm^2

Blade terminals commercially available (as of January 2017. The product may be changed without notice.)

- Phoenix Contact Co., Ltd.

Terminal screw size	Cable gauge (mm^2)	Ferrule terminal model		Crimping tool name
		With insulation sleeve	Without insulation sleeve	
M3 (Terminals A, B, C)	0.75	AI 0,75-6GY	A 0,75-6	CRIMPFOX 6
M2 (Terminals other than the above)	0.3	AI 0,34-6TQ	A 0,34-7	
	0.5	AI 0,5-6WH	A 0,5-6	

- NICHIFU Co., Ltd.

Terminal screw size	Cable gauge (mm^2)	Blade terminal model	Insulation product number	Crimping tool product number
M3 (Terminals A, B, C) M2 (Terminals other than the above)	0.3 to 0.75	BT 0.75-7	VC 0.75	NH 69

- When using a blade terminal (without insulation sleeve), take caution that the twisted wires do not come out.

■Wiring method

Loosen the terminal screw and insert the cable into the terminal.
Tighten the screw according to the specified tightening torque.
Undertightening may cause cable disconnection or malfunction. Overtightening may cause a short circuit or malfunction due to damage to the screw or unit.
Tightening torque: 0.5 N•m to 0.6 N•m (terminals A, B, and C)
0.22 N•m to 0.25 N•m (terminals other than described above)
Small flat-blade screwdriver (Tip thickness: 0.4 mm / tip width: 2.5 mm)

- For the connection to the terminal 5, use a screwdriver with a diameter of 1.6 mm or less. Put the screwdriver to avoid contact with the mounting screw area.

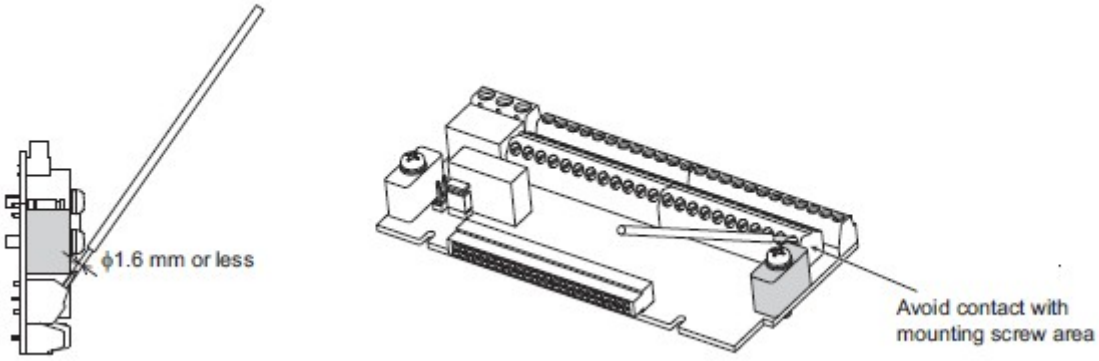

■Connection of encoder signals

Connect the encoder signals to the FR-A8TP.

Type	V500(L) terminal name	A8TP compatible terminal name
Encoder signals	PA	PA3
	PAR	PAR3
	PB	PB3
	PBR	PBR3
	PZ	PZ3
	PZR	PZR3
	PG	PG
	SD	SD

Instructions for connecting the vector control dedicated motor SF-V5RU:
When connecting the vector control dedicated motor SF-V5RU, set the FR-A8TP as follows.

- Encoder type selection switch: Complementary
- Internal terminating resistor selection switch: OFF

As the insertion type terminal block is used, cables need to be modified to use the FR-V5CBL.

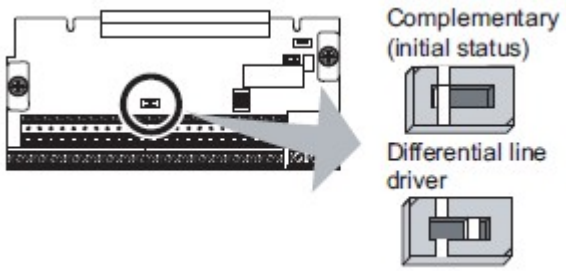

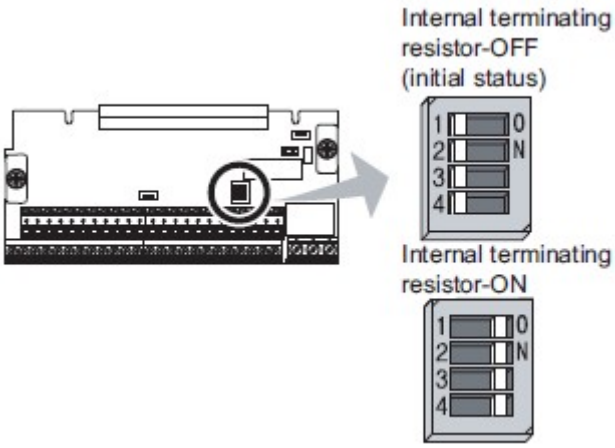

Motor and switch setting

Motor		Encoder type selection switch	Terminating resistor selection switch (SW1)	Power supply specification
Mitsubishi Electric standard motor with encoder Mitsubishi Electric high-efficiency motor with encoder	SF-JR	Differential	ON	5 V
	SF-HR	Differential	ON	5 V
	Others	*1	*1	*1*3
Mitsubishi Electric constant-torque motor with encoder	SF-JRCA	Differential	ON	5 V
	SF-HRCA	Differential	ON	5 V
	Others	*1	*1	*1*3
Vector control dedicated motor	SF-V5RU*4	Complementary	OFF	12 V or 24 V
Other manufacturer's motor with encoder		*1	*1	*1*3

*1 Set according to the motor (encoder).

*2 Prepare an encoder's power supply (5 V/12 V/15 V) according to the encoder to be used. Use terminal PG24 for the 24 V encoder's power supply.

*3 When the encoder output is the differential line driver type, only 5 V can be input.

*4 For SF-V5RU, 24 V complementary is also available.

4. PARAMETER

4.1. Parameter list

Note that most parameter numbers of inverters in both series are the same but some setting values differ. Refer to the following table to set the parameters.

List of FR-A800 series parameters compatible with the FR-V500 series

The following table shows the parameter settings required when replacing an FR-V500 series inverter by an FR-A800 series inverter.
When an FR-V500 series parameter is set to a value other than the initial value, set the corresponding FR-A800 series parameter according to the following table.
When an FR-V500 series parameter is set to an initial value, it is usually not necessary to change the corresponding FR-A800 series parameter setting.
The parameters with Δ are used for adjustment. Set them as required.
The parameter replacement following the table below does not guarantee the inverter characteristics or performance.
The parameter number of the parameters differs from that of the FR-V500 series inverter.

Setting ⦿: Set the FR-V500 parameter as it is.
Δ: Change the FR-V500 parameter and set.
×: Adjust or set the FR-A800 parameter.

FR-V500 parameter list				FR-A800 compatible parameter				Parameter setting	
Pr.	Name	Setting range	Initial value	Pr.	Name	Setting range	Initial value	Setting	Remarks
0	Torque boost	0 to 30%	1.5K to 3.7K: 4% 5.5K, 7.5K: 3% 11K to 55K: 2% 75K or higher: 1%	0	Torque boost	0 to 30%	0.4 to 0.75K: 6% 1.5K to 3.7K: 4% 5.5K, 7.5K: 3% 11K to 55K: 2% 75K or higher: 1%	Δ	
1	Maximum speed	0 to 3600 r/min	1500 r/min	1	Maximum frequency	0 to 120 Hz	55K or lower: 120 Hz 75K or higher: 60 Hz	×	For the FR-A800, use Pr.144 to change the unit to “r/min”, and then set the same as in the FR-V500 setting.
2	Minimum speed	0 to 3600 r/min	0 r/min	2	Minimum frequency	0 to 120 Hz	0 Hz	×	
3	Base frequency	10 to 200 Hz	60 Hz	3	Base frequency	0 to 590 Hz	60 Hz	×	
4	Multi-speed setting (high speed)	0 to 3600 r/min	1500 r/min	4	Multi-speed setting (high speed)	0 to 590 Hz	60 Hz	×	
5	Multi-speed setting (middle speed)	0 to 3600 r/min	750 r/min	5	Multi-speed setting (middle speed)	0 to 590 Hz	30 Hz	×	
6	Multi-speed setting (low speed)	0 to 3600 r/min	150 r/min	6	Multi-speed setting (low speed)	0 to 590 Hz	10 Hz	×	
7	Acceleration time	0 to 3600 s/ 0 to 360 s	5.5K or lower: 5 s 7.5K or higher: 15 s	7	Acceleration time	0 to 3600 s/ 0 to 360 s	7.5K or lower: 5 s 11K or higher: 15 s	⦿	Changing Pr.21 after setting this parameter will change the set value.
8	Deceleration time	0 to 3600 s/ 0 to 360 s	5.5K or lower: 5 s 7.5K or higher: 15 s	8	Deceleration time	0 to 3600 s/ 0 to 360 s	7.5K or lower: 5 s 11K or higher: 15 s	⦿	Changing Pr.21 after setting this parameter will change the set value.
9	Electronic thermal O/L relay	0 to 500 A	0 A	9	Electronic thermal O/L relay	0 to 500 A (55K or lower) 0 to 3600 A (75K or higher)	Rated output current	⦿	Set the rated motor current.
10	DC injection brake operation speed	0 to 1500 r/min, 9999	15 r/min	10	DC injection brake operation frequency	0 to 120 Hz, 9999	3 Hz	×	For the FR-A800, use Pr.144 to change the unit to “r/min”, and then set the same as in the FR-V500 setting.
11	DC injection brake operation time	0 to 0.5 s	0.5 s	11	DC injection brake operation time	0 to 10 s, 8888	0.5 s	⦿	
12	DC injection brake voltage	0 to 30%	7.5K or lower: 4% 11K to 55K: 2% 75K or higher: 1%	12	DC injection brake operation voltage	0 to 30%	7.5K or lower: 4% 11K to 55K: 2% 75K or higher: 1%	⦿	
13	Starting speed	0 to 1500 r/min	15 r/min	13	Starting frequency	0 to 60 Hz	0.5 Hz	×	For the FR-A800, use Pr.144 to change the unit to “r/min”, and then set the same as in the FR-V500 setting.
15	Jog speed setting	0 to 1500 r/min	150 r/min	15	Jog frequency	0 to 590 Hz	5 Hz	×	
16	Jog acceleration/deceleration time	0 to 3600 s/ 0 to 360 s	0.5 s	16	Jog acceleration/deceleration time	0 to 3600 s/ 0 to 360 s	0.5 s	⦿	Changing Pr.21 after setting this parameter will change the set value.
17	MRS input selection	0, 2	0	17	MRS input selection	0, 2, 4	0	⦿	
19	Base frequency voltage	0 to 1000 V, 8888, 9999	9999	19	Base frequency voltage	0 to 1000 V, 8888, 9999	9999	⦿	
20	Acceleration/deceleration reference speed	0 to 1500 r/min	1500 r/min	20	Acceleration/deceleration reference frequency	1 to 590 Hz	60 Hz	×	For the FR-A800, use Pr.144 to change the unit to “r/min”, and then set the same as in the FR-V500 setting.
21	Acceleration/deceleration time increments	0, 1	0	21	Acceleration/deceleration time increments	0, 1	0	⦿	

FR-V500 parameter list				FR-A800 compatible parameter				Parameter setting	
Pr.	Name	Setting range	Initial value	Pr.	Name	Setting range	Initial value	Setting	Remarks
22	Torque limit level	0 to 200%	150%	22	Stall prevention operation level	0 to 400%	150%	Δ	For stall prevention, set the value calculated with the following formula. Pr.22 setting (FR-V500) × rated current (FR-V500) / rated current (FR-A800). The torque limit remains the same. The upper limit of the setting value is 400%.
24	Multi-speed setting (speed 4)	0 to 3600 r/min, 9999	9999	24	Multi-speed setting (speed 4)	0 to 590 Hz, 9999	9999	×	For the FR-A800, use Pr.144 to change the unit to “r/min”, and then set the same as in the FR-V500 setting.
25	Multi-speed setting (speed 5)	0 to 3600 r/min, 9999	9999	25	Multi-speed setting (speed 5)	0 to 590 Hz, 9999	9999	×	
26	Multi-speed setting (speed 6)	0 to 3600 r/min, 9999	9999	26	Multi-speed setting (speed 6)	0 to 590 Hz, 9999	9999	×	
27	Multi-speed setting (speed 7)	0 to 3600 r/min, 9999	9999	27	Multi-speed setting (speed 7)	0 to 590 Hz, 9999	9999	×	
28	Multi-speed input compensation	0, 1	0	28	Multi-speed input compensation selection	0, 1	0	⦿	
29	Acceleration/deceleration pattern	0, 1, 2, 3, 4	0	29	Acceleration/deceleration pattern selection	0 to 6	0	⦿	
30	Regenerative function selection	0, 1, 2	0	30	Regenerative function selection	0 to 2, 10, 11, 20, 21, 100 to 102, 110, 111, 120, 121	0	⦿	
31	Speed jump 1A	0 to 3600 r/min, 9999	9999	31	Frequency jump 1A	0 to 590 Hz, 9999	9999	×	For the FR-A800, use Pr.144 to change the unit to “r/min”, and then set the same as in the FR-V500 setting.
32	Speed jump 1B	0 to 3600 r/min, 9999	9999	32	Frequency jump 1B	0 to 590 Hz, 9999	9999	×	
33	Speed jump 2A	0 to 3600 r/min, 9999	9999	33	Frequency jump 2A	0 to 590 Hz, 9999	9999	×	
34	Speed jump 2B	0 to 3600 r/min, 9999	9999	34	Frequency jump 2B	0 to 590 Hz, 9999	9999	×	
35	Speed jump 3A	0 to 3600 r/min, 9999	9999	35	Frequency jump 3A	0 to 590 Hz, 9999	9999	×	
36	Speed jump 3B	0 to 3600 r/min, 9999	9999	36	Frequency jump 3B	0 to 590 Hz, 9999	9999	×	
37	Speed display	0,1 to 9998	0	37	Speed display	0,1 to 9998	0	⦿	
41	Up-to-speed sensitivity	0 to 100%	10%	41	Up-to-frequency sensitivity	0 to 100%	10%	⦿	
42	Speed detection	0 to 3600 r/min	300 r/min	42	Output frequency detection	0 to 590 Hz	6 Hz	×	For the FR-A800, use Pr.144 to change the unit to “r/min”, and then set the same as in the FR-V500 setting.
43	Speed detection for reverse rotation	0 to 3600 r/min, 9999	9999	43	Output frequency detection for reverse rotation	0 to 590 Hz, 9999	9999	×	
44	Second acceleration/deceleration time	0 to 3600 s/ 0 to 360 s	5 s	44	Second acceleration/deceleration time	0 to 3600 s/ 0 to 360 s	5 s	⦿	Changing Pr.21 after setting this parameter will change the set value.
45	Second deceleration time	0 to 3600 s/ 0 to 360 s, 9999	9999	45	Second deceleration time	0 to 3600 s/ 0 to 360 s, 9999	9999	⦿	Changing Pr.21 after setting this parameter will change the set value.
50	Second speed detection	0 to 3600 r/min	750 r/min	50	Second output frequency detection	0 to 590 Hz	30 Hz	×	For the FR-A800, use Pr.144 to change the unit to “r/min”, and then set the same as in the FR-V500 setting.
52	DU/PU main display data selection	0, 5 to 12, 17 to 20, 23, 24, 32 to 35, 38, 100	0	52	Operation panel main monitor selection	0, 5 to 14, 17 to 20, 22 to 36, 38 to 46, 50 to 57, 61, 62, 64, 67, 71 to 75, 87 to 98, 100	0	⦿	When Pr.52="23", the monitor display increment for actual operation time is changed.
53	PU level display data selection	0 to 3, 5 to 12, 17, 18	1	–	–	–	–	–	This function was deleted for the FR-A800.
54	DA1 terminal function selection	1 to 3, 5 to 12, 17, 18, 21, 32 to 34, 36	1	–	–	–	–	×	Use the plug-in option FR-A8AY as required.
55	Speed monitoring reference	0 to 3600 r/min	1500 r/min	55	Frequency monitoring reference	0 to 590 Hz	60 Hz	×	For the FR-A800, use Pr.144 to change the unit to “r/min”, and then set the same as in the FR-V500 setting.
56	Current monitoring reference	0 to 500 A (V500) 0 to 3600 A (V500L)	Rated output current	56	Current monitoring reference	0 to 500 A (55K or lower) 0 to 3600 A (75K or higher)	Rated output current	⦿	
57	Restart coasting time	0, 0.1 to 5 s, 9999	9999	57	Restart coasting time	0, 0.1 to 30 s, 9999	9999	Δ	When Pr.57 ="0", the coasting time differs. It is usually not necessary to change the value. For the same time setting as the FR-V500, set 0.1 s. If the CS signal is not assigned to any input terminal, the restart operation is enabled at all times by setting Pr.57 in the FR-A800.
58	Restart cushion time	0 to 60 s	1.0 s	58	Restart cushion time	0 to 60 s	1.0 s	⦿	
59	Remote setting function selection	0, 1, 2, 3	0	59	Remote function selection	0 to 3, 11 to 13	0	⦿	
60	Intelligent mode selection	0, 7, 8	0	292	Automatic acceleration/deceleration	0, 1, 3, 5 to 8, 11	0	Δ	For the same operation as the FR-V500 with Pr.292="7 or 8" (brake sequence), Pr.639, Pr.640, and Pr.641 of the FR-A800 must be the initial values.
65	Retry selection	0 to 5	0	65	Retry selection	0 to 5	0	⦿	
67	Number of retries at alarm occurrence	0 to 10, 101 to 110	0	67	Number of retries at fault occurrence	0 to 10, 101 to 110	0	⦿	
68	Retry waiting time	0 to 10 s	1 s	68	Retry waiting time	0.1 to 600 s	1 s	⦿	
69	Retry count display erasure	0	0	69	Retry count display erase	0	0	⦿	

FR-V500 parameter list				FR-A800 compatible parameter				Parameter setting	
Pr.	Name	Setting range	Initial value	Pr.	Name	Setting range	Initial value	Setting	Remarks
70	Special regenerative brake duty	0 to 15% 0 to 30%	0%	70	Special regenerative brake duty	0 to 100%	0%	Δ	Set the permissible brake resistor duty in this parameter.
71	Applied motor	0, 3 to 8, 10, 13 to 18, 20, 23, 24, 30, 33, 34	30	71	Applied motor	0 to 6, 13 to 16, 20, 23, 24, 30, 33, 34, 40, 43, 44, 50, 53, 54, 70, 73, 74, 330, 333, 334, 8090, 8093, 8094, 9090, 9093, 9094	0	Δ	V500 → A800 The values in parentheses are for when Pr.96 of the FR-V500 is set to "3 or 103". 7 → 5 (3), 8 → 6 (3), 17 → 15 (13) 18 → 16 (13) Only for V500L 20, 23, and 24 → 1,13 (14) Offline tuning required
72	PWM frequency selection	0 to 6	1	72	PWM frequency selection	55K or lower: 0 to 15 75K or higher: 0 to 6, 25	2	Δ	
73	Speed setting signal	0, 4, 10, 14	0	73	Analog input selection	0 to 7, 10 to 17	1	Δ	The initial value is different. Change the setting from "1" to "0".
75	Reset selection/ disconnected PU detection/ PU stop selection	0 to 3, 14 to 17	14	75	Reset selection/ disconnected PU detection/ PU stop selection	55K or lower: 0 to 3, 14 to 17 75K or higher: 0 to 3, 14 to 17, 100 to 103, 114 to 117	14	⊙	
77	Parameter write disable selection	0, 1, 2	0	77	Parameter write selection	0, 1, 2	0	⊙	
78	Reverse rotation prevention selection	0, 1, 2	0	78	Reverse rotation prevention selection	0, 1, 2	0	⊙	
79	Operation mode selection	0 to 4, 6 to 8	1	79	Operation mode selection	0 to 4, 6, 7	0	×	When the FR-V500 setting is "8", set Pr.182="16" for the FR-A800.
80	Motor capacity	0.4 to 55 kW, 9999 (V500) 0 to 3600 kW (V500L)	Inverter capacity	80	Motor capacity	55K or lower: 0.4 to 55 kW, 9999 75K or higher: 0 to 3600 kW, 9999	9999	×	Keep the Pr.80 setting the same as in the FR-V500. Set the number of motor poles in Pr.81, and set Pr.800="0" (vector control).
81	Number of motor poles	2, 4, 6	4	81	Number of motor poles	2, 4, 6, 8, 10, 12, 9999	9999	⊙	
82	Motor excitation current (no load current)	0 to, 9999	9999	82	Motor excitation current	55K or lower: 0 to 500 A, 9999 75K or higher: 0 to 3600 A, 9999	9999	⊙	
83	Rated motor voltage	0 to 1000 V	200 V class: 200 V 400 V class: 400 V	83	Rated motor voltage	0 to 1000 V	200 V class: 200 V 400 V class: 400 V	×	Refer to the tables below for setting in the SF-V5RU (1500 r/min series), SF-V5RU1, SF-V5RU3, or SF-V5RU4 motor.
84	Rated motor frequency	10 to 200 Hz	60 Hz	84	Rated motor frequency	10 to 400 Hz, 9999	9999	×	
90	Motor constant R1	0 to, 9999	9999	90	Motor constant (R1)	55K or lower: 0 to 50 Ω, 9999 75K or higher: 0 to 400 mΩ, 9999	9999	×	Connect the motor, and perform auto tuning.
91	Motor constant R2	0 to, 9999	9999	91	Motor constant (R2)	55K or lower: 0 to 50 Ω, 9999 75K or higher: 0 to 400 mΩ, 9999	9999	×	
92	Motor constant L1	0 to, 9999	9999	92	Motor constant (L1)	55K or lower: 0 to 50 Ω (0 to 1000 mH), 9999 75K or higher: 0 to 3600 mΩ (0 to 400 mH), 9999	9999	×	
93	Motor constant L2	0 to, 9999	9999	93	Motor constant (L2)	55K or lower: 0 to 50 Ω (0 to 1000 mH), 9999 75K or higher: 0 to 3600 mΩ (0 to 400 mH), 9999	9999	×	
94	Motor constant X	0 to, 9999	9999	94	Motor constant (X)	0 to 100%, 9999	9999	×	
95	Online auto tuning selection	0 to, 9999	9999	95	Online auto tuning selection	0, 1, 2	0	×	Set "2" (magnetic flux observer (tuning always)) for vector control.
96	Auto tuning setting/status	0, 1, 101	0	96	Auto tuning setting/status	0, 1, 11,101	0	×	Perform tuning again when Pr.96="1 or 101".

When using the SF-V5RU (1500 r/min series)

Motor capacity	SF-V5RU			
	200 V		400 V	
	Pr.83 (V)	Pr.84 (Hz)	Pr.83 (V)	Pr.84 (Hz)
1.5 kW	188	52	345	52
2.2 kW	188	52	360	52

When using the SF-V5RU1, SF-V5RU3, or SF-V5RU4

Motor model	Pr.
	200 V class
SF-V5RU1-30kW or lower	160 V
SF-V5RU1-37kW	170 V

FR-V500 parameter list				FR-A800 compatible parameter				Parameter setting	
Pr.	Name	Setting range	Initial value	Pr.	Name	Setting range	Initial value	Setting	Remarks
110	Third acceleration/deceleration time	0 to 3600 / 0 to 360 s	5 s	110	Third acceleration/ deceleration time	0 to 3600 / 0 to 360 s, 9999	9999	⊙	Changing Pr.21 after setting this parameter will change the set value.
111	Third deceleration time	0 to 3600 / 0 to 360 s, 9999	9999	111	Third deceleration time	0 to 3600 / 0 to 360 s, 9999	9999	⊙	Changing Pr.21 after setting this parameter will change the set value.
116	Third speed detection	0 to 3600 r/min	1500 r/min	116	Third output frequency detection	0 to 590 Hz	60 Hz	×	For the FR-A800, use Pr.144 to change the unit to “r/min”, and then set the same as in the FR-V500 setting.
117	Communication station number	0 to 31	0	117	PU communication station number	0 to 31	0	⊙	
118	Communication speed	48, 96, 192	192	118	PU communication speed	48, 96, 192, 384, 576, 768, 1152	192	⊙	
119	Stop bit length/data length	0, 1, 10, 11	1	119	PU communication stop bit length / data length	0, 1, 10, 11	1	⊙	
120	Parity check presence/absence	0, 1, 2	2	120	PU communication parity check	0, 1, 2	2	⊙	
121	Number of communication retries	0 to 10, 9999	1	121	Number of PU communication retries	0 to 10, 9999	1	⊙	
122	Communication check time interval	0, 0.1 to 999.8 s, 9999	0	122	PU communication check time interval	0, 0.1 to 999.8 s, 9999	9999	⊙	
123	Waiting time setting	0 to 150 ms, 9999	9999	123	PU communication waiting time setting	0 to 150, 9999	9999	⊙	
124	CR, LF selection	0, 1, 2	1	124	PU communication CR/LF selection	0, 1, 2	1	⊙	
128	PID action selection	10, 11, 30, 31	10	128	PID action selection	0, 10, 11, 20, 21, 40 to 43, 50, 51, 60, 61, 70, 71, 80, 81, 90, 91, 100, 101, 1000, 1001, 1010, 1011, 2000, 2001, 2010, 2011	0	×	When Pr.128="30 or 31" in FR-A500, change the setting to "1000 or 1001" and set Pr.609 and Pr.610 in FR-A800. When the PID control is not used, set "0" for the FR-A800. Even if the X14 signal is not assigned to any input terminal, the PID control is enabled by setting Pr.128 in the FR-A800.
129	PID proportional band	0.1 to 1000%, 9999	100%	129	PID proportional band	0.1 to 1000%, 9999	100%	⊙	
130	PID integral time	0.1 to 3600 s, 9999	1 s	130	PID integral time	0.1 to 3600 s, 9999	1 s	⊙	
131	Upper limit	0 to 100%, 9999	9999	131	PID upper limit	0 to 100%, 9999	9999	⊙	
132	Lower limit	0 to 100%, 9999	9999	132	PID lower limit	0 to 100%, 9999	9999	⊙	
133	PID action set point for PU operation	0 to 100%	0%	133	PID action set point	0 to 100%, 9999	9999	Δ	When the value of terminal 2 is used as a set point for the FR-A800, set "9999". When the value other than "9999" is set for the FR-A800, the set point will be also valid for operations other than the PU operation.
134	PID differential time	0.01 to 10 s, 9999	9999	134	PID differential time	0.01 to 10.00 s, 9999	9999	⊙	
140	Backlash acceleration stopping speed	0 to 3600 r/min	30 r/min	140	Backlash acceleration stopping frequency	0 to 590 Hz	1 Hz	×	For the FR-A800, use Pr.144 to change the unit to “r/min”, and then set the same as in the FR-V500 setting.
141	Backlash acceleration stopping time	0 to 360 s	0.5 s	141	Backlash acceleration stopping time	0 to 360 s	0.5 s	⊙	
142	Backlash deceleration stopping speed	0 to 3600 r/min	30 r/min	142	Backlash deceleration stopping frequency	0 to 590 Hz	1 Hz	×	For the FR-A800, use Pr.144 to change the unit to “r/min”, and then set the same as in the FR-V500 setting.
143	Backlash deceleration stopping time	0 to 360 s	0.5 s	143	Backlash deceleration stopping time	0 to 360 s	0.5 s	⊙	
144	Speed setting switchover	0, 2, 4, 6, 8, 10	0	144	Speed setting switchover	0, 2, 4, 6, 8, 10, 12, 102, 104, 106, 108, 110, 112	4	×	When a Mitsubishi vector control dedicated motor is used, set "104".
145	PU display language selection	0 to 7	0	145	PU display language selection	0 to 7	0	⊙	
150	Output current detection level	0 to 200%	150%	150	Output current detection level	0 to 400%	150%	⊙	Set the value calculated with the following formula. Pr.150 setting (FR-V500) × rated current (FR-V500) / rated current (FR-A800). The upper limit of the setting value is 220%.
151	Output current detection period	0 to 10 s	0	151	Output current detection signal delay time	0 to 10 s	0	⊙	
152	Zero current detection level	0 to 200%	5.0%	152	Zero current detection level	0 to 400%	5.0%	⊙	Set the value calculated with the following formula. Pr.150 setting (FR-V500) × rated current (FR-V500) / rated current (FR-A800). The upper limit of the setting value is 220%.
153	Zero current detection period	0 to 1 s	0.5 s	153	Zero current detection time	0 to 10 s	0.5 s	⊙	
156	Stall prevention operation selection	0 to 31, 100, 101	0	156	Stall prevention operation selection	0 to 31, 100, 101	0	⊙	
157	OL signal output timer	0 to 25 s, 9999	0	157	OL signal output timer	0 to 25 s, 9999	0	⊙	
158	DA2 terminal function selection	1 to 3, 5 to 12, 17, 18, 21, 32 to 34, 36	1	158	AM terminal function selection	1 to 3, 5 to 14, 17, 18, 21, 24, 32 to 34, 36, 46, 50, 52 to 54, 61, 62, 67, 70, 87 to 90, 91 to 98	1	Δ	The resolution will change from 12 bits to 8 bits.

FR-V500 parameter list				FR-A800 compatible parameter				Parameter setting	
Pr.	Name	Setting range	Initial value	Pr.	Name	Setting range	Initial value	Setting	Remarks
160	Extended function selection	0, 1	0	160	User group read selection	0, 1, 9999	0	×	With the initial value, simple mode parameters and extended parameters can be displayed for FR-A800.
162	Automatic restart after instantaneous power failure selection	0, 1, 10	0	162	Automatic restart after instantaneous power failure selection	0 to 3, 10 to 13	0	⦿	
163	First cushion time for restart	0 to 20 s	0 s	163	First cushion time for restart	0 to 20 s	0 s	⦿	
164	First cushion voltage for restart	0 to 100%	0%	164	First cushion voltage for restart	0 to 100%	0%	⦿	
165	Restart current limit level	0 to 200%	150%	165	Stall prevention operation level for restart	0 to 400%	150%	×	Set the value calculated with the following formula. Pr.165 setting (FR-V500) × Rated current (FR-V500) / Rated current (FR-A800) The upper limit of the setting value is 220%.
171	Actual operation hour meter clear	0	0	171	Operation hour meter clear	0, 9999	9999	⦿	Actual operation hour meter is cleared by writing "0".
180	DI1 terminal function selection	0 to 3, 5, 8 to 12, 14 to 16, 20, 22 to 28, 42 to 44, 9999	0	180	DI1 terminal function selection	0 to 20, 22 to 28, 37, 42 to 47, 50, 51, 62, 64 to 74, 76 to 80, 87, 92, 93, 9999	0	⦿	
181	DI2 terminal function selection		1	181	DI2 terminal function selection		1	⦿	
182	DI3 terminal function selection		2	182	DI3 terminal function selection		2	⦿	
183	DI4 terminal function selection		3	185	DI4 terminal function selection		5	Δ	
187	STR terminal function selection		9999	179	STR terminal function selection	0 to 20, 22 to 28, 37, 42 to 47, 50, 51, 61, 62, 64 to 74, 76 to 80, 87, 92, 93, 9999	61	×	
190	DO1 terminal function selection	0 to 8, 10 to 16, 20, 25 to 27, 30 to 37, 39, 40 to 44, 96 to 99, 100 to 108, 110 to 116, 120, 125 to 127, 130 to 137, 139, 140 to 144, 196 to 199, 9999	0	190	DO1 terminal function selection	0 to 8, 10 to 20, 22, 25 to 28, 30 to 36 ,38 to 54, 56, 57, 60, 61, 63, 64, 68, 70, 79, 84, 85, 90 to 99, 100 to 108, 110 to 116, 120, 122, 125 to 128, 130 to 136, 138 to 154, 156, 157, 160, 161, 163, 164, 168, 170, 179, 184, 185, 190 to 199, 200 to 208, 300 to 308, 9999	0	⦿	
191	DO2 terminal function selection		1	191	DO2 terminal function selection		1	⦿	
192	DO3 terminal function selection		2	192	DO3 terminal function selection		2	⦿	
195	A,B,C terminal function selection		99	195	ABC terminal function selection	0 to 8, 10 to 20, 22, 25 to 28, 30 to 36 ,38 to 54, 56, 57, 60, 61, 63, 64, 68, 70, 79, 84, 85, 90, 91, 94 to 99, 100 to 108, 110 to 116, 120, 122, 125 to 128, 130 to 136, 138 to 154, 156, 157, 160, 161, 163, 164, 168, 170, 179, 184, 185, 190, 191, 194 to 199, 200 to 208, 300 to 308, 9999	99	⦿	
232	Multi-speed setting (speed 8)	0 to 3600 r/min, 9999	9999	232	Multi-speed setting (speed 8)	0 to 590 Hz, 9999	9999	×	For the FR-A800, use Pr.144 to change the unit to “r/min”, and then set the same as in the FR-V500 setting.
233	Multi-speed setting (speed 9)	0 to 3600 r/min, 9999	9999	233	Multi-speed setting (speed 9)	0 to 590 Hz, 9999	9999	×	
234	Multi-speed setting (speed 10)	0 to 3600 r/min, 9999	9999	234	Multi-speed setting (speed 10)	0 to 590 Hz, 9999	9999	×	
235	Multi-speed setting (speed 11)	0 to 3600 r/min, 9999	9999	235	Multi-speed setting (speed 11)	0 to 590 Hz, 9999	9999	×	
236	Multi-speed setting (speed 12)	0 to 3600 r/min, 9999	9999	236	Multi-speed setting (speed 12)	0 to 590 Hz, 9999	9999	×	
237	Multi-speed setting (speed 13)	0 to 3600 r/min, 9999	9999	237	Multi-speed setting (speed 13)	0 to 590 Hz, 9999	9999	×	
238	Multi-speed setting (speed 14)	0 to 3600 r/min, 9999	9999	238	Multi-speed setting (speed 14)	0 to 590 Hz, 9999	9999	×	
239	Multi-speed setting (speed 15)	0 to 3600 r/min, 9999	9999	239	Multi-speed setting (speed 15)	0 to 590 Hz, 9999	9999	×	
240	Soft-PWM setting	0, 1, 10, 11	10	240	Soft-PWM operation selection	0, 1	1	×	Long wiring mode is not available for the FR–A800.
244	Cooling fan operation selection	0, 1	0	244	Cooling fan operation selection	0, 1, 101 to 105	1	Δ	The initial values for both series differ.
250	Stop selection	0 to 100 s, 9999	9999	250	Stop selection	0 to 100 s, 1000 to 1100 s, 8888, 9999	9999	⦿	
251	Output phase failure protection selection	0, 1	1	251	Output phase loss protection selection	0, 1	1	⦿	
252	Override bias	0 to 200%	50%	252	Override bias	0 to 200%	50%	⦿	
253	Override gain	0 to 200%	150%	253	Override gain	0 to 200%	150%	⦿	

FR-V500 parameter list				FR-A800 compatible parameter				Parameter setting	
Pr.	Name	Setting range	Initial value	Pr.	Name	Setting range	Initial value	Setting	Remarks
261	Power failure stop selection	0, 1	0	261	Power failure stop selection	0, 1, 2, 11, 12, 21, 22	0	⊙	
262	Subtracted speed at deceleration start	0 to 600 r/min	90 r/min	262	Subtracted frequency at deceleration start	0 to 20 Hz	3 Hz	×	For the FR-A800, use Pr.144 to change the unit to “r/min”, and then set the same as in the FR-V500 setting.
263	Subtraction starting speed	0 to 3600 r/min, 9999	1500 r/min	263	Subtraction starting frequency	0 to 590 Hz, 9999	60 Hz	×	
264	Power-failure deceleration time 1	0 to 3600 / 0 to 360 s	5 s	264	Power-failure deceleration time 1	0 to 3600/360 s	5 s	⊙	Changing Pr.21 after setting this parameter will change the set value.
265	Power-failure deceleration time 2	0 to 3600 / 0 to 360 s, 9999	9999	265	Power-failure deceleration time 2	0 to 3600/360s, 9999	9999	⊙	
266	Power-failure deceleration time switchover speed	0 to 3600 r/min	1500 r/min	266	Power failure deceleration time switchover frequency	0 to 590 Hz	60 Hz	×	For the FR-A800, use Pr.144 to change the unit to “r/min”, and then set the same as in the FR-V500 setting.
278	Brake opening speed	0 to 900 r/min	20 r/min	278	Brake opening frequency	0 to 30 Hz	3 Hz	×	
279	Brake opening current	0 to 200%	130%	279	Brake opening current	0 to 400%	130%	⊙	Set the value calculated with the following formula. Pr.279 setting (FR-V500) × rated current (FR-V500) / rated current (FR-A800). The upper limit of the setting value is 220%.
280	Brake opening current detection time	0 to 2 s	0.3 s	280	Brake opening current detection time	0 to 2 s	0.3 s	⊙	
281	Brake operation time at start	0 to 5 s	0.3 s	281	Brake operation time at start	0 to 5 s	0.3 s	⊙	
282	Brake operation speed	0 to 900 r/min	25 r/min	282	Brake operation frequency	0 to 30 Hz	6 Hz	×	For the FR-A800, use Pr.144 to change the unit to “r/min”, and then set the same as in the FR-V500 setting.
283	Brake operation time at stop	0 to 5 s	0.3 s	283	Brake operation time at stop	0 to 5 s	0.3 s	⊙	
284	Deceleration detection function selection	0, 1	0	284	Deceleration detection function selection	0, 1	0	⊙	
285	Overspeed detection speed	0 to 900 r/min, 9999	9999	285	Overspeed detection frequency	0 to 30 Hz, 9999	9999	×	For the FR-A800, use Pr.144 to change the unit to “r/min”, and then set the same as in the FR-V500 setting.
286	Droop gain	0 to 100.0%	0%	286	Droop gain	0 to 100%	0%	⊙	
287	Droop filter time constant	0.00 to 1.00 s	0.3 s	287	Droop filter time constant	0 to 1 s	0.3 s	⊙	
288	Droop function activation selection	0, 1, 2	0	288	Droop function activation selection	0, 1, 2, 10, 11	0	⊙	
342	E2PROM write selection	0, 1	0	342	Communication EEPROM write selection	0, 1	0	⊙	
350	Stop position command selection	0, 1, 2, 3, 9999	9999	350	Stop position command selection	0, 1, 9999	9999	×	The specifications for both series differ. The choice for external stop position command is 16-bit data only.
351	Orientation switchover speed	0 to 1000 r/min	200 r/min	351	Orientation speed	0 to 30 Hz	2 Hz	×	For the FR-A800, use Pr.144 to change the unit to “r/min”, and then set the same as in the FR-V500 setting.
356	Internal stop position command	0 to 16383	0	356	Internal stop position command	0 to 16383	0	×	These parameters are used for adjustment. Adjust the setting as required.
357	In-position zone	0 to 8192	11	357	Orientation in-position zone	0 to 255	5	×	
360	External position command selection	0, 1, 2 to 127	0	360	16-bit data selection	0 to 127	0	×	The specifications for both series differ. Adjust the setting according to the target machine.
361	Position shift	0 to 16383	0	361	Position shift	0 to 16383	0	×	
362	Orientation position loop gain	0.1 to 100	10	362	Orientation position loop gain	0.1 to 100	1	×	This parameter is used for adjustment. Adjust the setting as required.
374	Overspeed detection level	0 to 4200 r/min	3450 r/min	374	Overspeed detection level	0 to 590 Hz, 9999	9999	×	For the FR-A800, use Pr.144 to change the unit to “r/min”, and then set the same as in the FR-V500 setting.
380	Acceleration S pattern 1	0 to 50%	0%	380	Acceleration S-pattern 1	0 to 50%	0%	⊙	
381	Deceleration S pattern 1	0 to 50%	0%	381	Deceleration S-pattern 1	0 to 50%	0%	⊙	
382	Acceleration S pattern 2	0 to 50%	0%	382	Acceleration S-pattern 2	0 to 50%	0%	⊙	
383	Deceleration S pattern 2	0 to 50%	0%	383	Deceleration S-pattern 2	0 to 50%	0%	⊙	
393	Orientation selection	0, 1, 2, 10, 11, 12	0	393	Orientation selection	0, 1, 2, 10, 11, 12	0	×	These parameters are used for adjustment. Adjust the setting as required.
396	Orientation speed gain (P term)	0 to 1000%	60%	396	Orientation speed gain (P term)	0 to 1000	60	×	
397	Orientation speed integral time	0 to 20.0 s	0.333 s	397	Orientation speed integral time	0 to 20 s	0.333 s	×	
398	Orientation speed gain (D term)	0 to 100.0%	1	398	Orientation speed gain (D term)	0 to 100	1	×	
399	Orientation deceleration ratio	0 to 1000	20	399	Orientation deceleration ratio	0 to 1000	20	×	
408	Motor thermistor selection	0, 1	0	–	–	–	–	×	Not available for the FR-A800.
419	Position command source selection	0, 1	0	419	Position command source selection	0, 2	0	Δ	The setting of position command by pulse train input (setting "1") is not available for the FR-A800. When pulse train input to the inverter is not possible, consider the use of the FR-A8AL.
420	Command pulse scaling factor numerator	0 to 32767	1	420	Command pulse scaling factor numerator	1 to 32767	1	⊙	
421	Command pulse scaling factor denominator	0 to 32767	1	421	Command pulse multiplication denominator	1 to 32767	1	⊙	
422	Position loop gain	0 to 150 s^{-1}	25 s^{-1}	422	Position control gain	0 to 150 s^{-1}	25 s^{-1}	×	These parameters are used for adjustment. Adjust the setting as required.
423	Position feed forward gain	0 to 100%	0%	423	Position feed forward gain	0 to 100%	0%	×	
424	Position command acceleration/ deceleration time constant	0 to 50 s	0 s	424	Position command acceleration/ deceleration time constant	0 to 50 s	0 s	×	
425	Position feed forward command filter	0 to 5 s	0 s	425	Position feed forward command filter	0 to 5 s	0 s	×	

FR-V500 parameter list				FR-A800 compatible parameter				Parameter setting	
Pr.	Name	Setting range	Initial value	Pr.	Name	Setting range	Initial value	Setting	Remarks
426	In-position width	0 to 32767 pulses	100 pulses	426	In-position width	0 to 32767 pulses	100 pulses	⦿	
427	Excessive level error	0 to 400K, 9999	40K	427	Excessive level error	0 to 400k pulses, 9999	40k pulses	⦿	
430	Pulse monitor selection	0 to 5, 9999	9999	430	Pulse monitor selection	0 to 5, 100 to 105, 1000 to 1005, 1100 to 1105, 8888, 9999	9999	⦿	
450	Second applied motor	0, 10, 30, 9999	9999	450	Second applied motor	0, 1, 3 to 6, 13 to 16, 20, 23, 24, 30, 33, 34, 40, 43, 44, 50, 53, 54, 70, 73, 74, 330, 333, 334, 8090, 8093, 8094, 9090, 9093, 9094, 9999	9999	Δ	V500 → A800 The values in parentheses are for when Pr.96 of the FR-V500 is set to "3 or 103". 2 → 0 7 → 5 (3) 8 → 6 (3) 17 → 15 (13) 18 → 16 (13)
451	Second motor control method selection	20, 9999	9999	451	Second motor control method selection	10 to 14, 20, 110 to 114, 9999	9999	⦿	
452	Second electronic thermal O/L relay	0 to 500 A, 9999 (V500) 0 to 500 A, 9999 (V500L)	9999	51	Second electronic thermal O/L relay	0 to 500 A, 9999 (55K or lower) 0 to 3600 A, 9999 (75K or higher)	9999	⦿	
453	Second motor capacity	0.4 to 55 kW (V500) 0 to 3600 kW (V500L)	Inverter capacity	453	Second motor capacity	0.4 to 55 kW, 9999 (55K or lower) 0 to 3600 kW, 9999 (75K or higher)	9999	Δ	
454	Number of second motor poles	2, 4, 6	4	454	Number of second motor poles	2, 4, 6, 8, 10, 12, 9999	9999	Δ	
464	Digital position control sudden stop deceleration time	0 to 360.0 s	0	464	Digital position control sudden stop deceleration time	0 to 360.0 s	0	⦿	
465	First position feed amount lower 4 digits	0 to 9999	0	465	First target position lower 4 digits	0 to 9999	0	⦿	
466	First position feed amount upper 4 digits	0 to 9999	0	466	First target position upper 4 digits	0 to 9999	0	⦿	
467	Second position feed amount lower 4 digits	0 to 9999	0	467	Second target position lower 4 digits	0 to 9999	0	⦿	
468	Second position feed amount upper 4 digits	0 to 9999	0	468	Second target position upper 4 digits	0 to 9999	0	⦿	
469	Third position feed amount lower 4 digits	0 to 9999	0	469	Third target position lower 4 digits	0 to 9999	0	⦿	
470	Third position feed amount upper 4 digits	0 to 9999	0	470	Third target position upper 4 digits	0 to 9999	0	⦿	
471	Fourth position feed amount lower 4 digits	0 to 9999	0	471	Fourth target position lower 4 digits	0 to 9999	0	⦿	
472	Fourth position feed amount upper 4 digits	0 to 9999	0	472	Fourth target position upper 4 digits	0 to 9999	0	⦿	
473	Fifth position feed amount lower 4 digits	0 to 9999	0	473	Fifth target position lower 4 digits	0 to 9999	0	⦿	
474	Fifth position feed amount upper 4 digits	0 to 9999	0	474	Fifth target position upper 4 digits	0 to 9999	0	⦿	
475	Sixth position feed amount lower 4 digits	0 to 9999	0	475	Sixth target position lower 4 digits	0 to 9999	0	⦿	
476	Sixth position feed amount upper 4 digits	0 to 9999	0	476	Sixth target position upper 4 digits	0 to 9999	0	⦿	
477	Seventh position feed amount lower 4 digits	0 to 9999	0	477	Seventh target position lower 4 digits	0 to 9999	0	⦿	
478	Seventh position feed amount upper 4 digits	0 to 9999	0	478	Seventh target position upper 4 digits	0 to 9999	0	⦿	
479	Eighth position feed amount lower 4 digits	0 to 9999	0	479	Eighth target position lower 4 digits	0 to 9999	0	⦿	
480	Eighth position feed amount upper 4 digits	0 to 9999	0	480	Eighth target position upper 4 digits	0 to 9999	0	⦿	
481	Ninth position feed amount lower 4 digits	0 to 9999	0	481	Ninth target position lower 4 digits	0 to 9999	0	⦿	
482	Ninth position feed amount upper 4 digits	0 to 9999	0	482	Ninth target position upper 9 digits	0 to 9999	0	⦿	
483	Tenth position feed amount lower 4 digits	0 to 9999	0	483	Tenth target position lower 4 digits	0 to 9999	0	⦿	
484	Tenth position feed amount upper 4 digits	0 to 9999	0	484	Tenth target position upper 4 digits	0 to 9999	0	⦿	
485	Eleventh position feed amount lower 4 digits	0 to 9999	0	485	Eleventh target position lower 4 digits	0 to 9999	0	⦿	
486	Eleventh position feed amount upper 4 digits	0 to 9999	0	486	Eleventh target position upper 4 digits	0 to 9999	0	⦿	
487	Twelfth position feed amount lower 4 digits	0 to 9999	0	487	Twelfth target position lower 4 digits	0 to 9999	0	⦿	
488	Twelfth position feed amount upper 4 digits	0 to 9999	0	488	Twelfth target position upper 4 digits	0 to 9999	0	⦿	
489	Thirteenth position feed amount lower 4 digits	0 to 9999	0	489	Thirteenth target position lower 4 digits	0 to 9999	0	⦿	
490	Thirteenth position feed amount upper 4 digits	0 to 9999	0	490	Thirteenth target position upper 4 digits	0 to 9999	0	⦿	
491	Fourteenth position feed amount lower 4 digits	0 to 9999	0	491	Fourteenth target position lower 4 digits	0 to 9999	0	⦿	
492	Fourteenth position feed amount upper 4 digits	0 to 9999	0	492	Fourteenth target position upper 4 digits	0 to 9999	0	⦿	
493	Fifteenth position feed amount lower 4 digits	0 to 9999	0	493	Fifteenth target position lower 4 digits	0 to 9999	0	⦿	
494	Fifteenth position feed amount upper 4 digits	0 to 9999	0	494	Fifteenth target position upper 4 digits	0 to 9999	0	⦿	
495	Remote output selection	0, 1	0	495	Remote output selection	0, 1, 10, 11	0	Δ	
496	Remote output data 1	0 to 4095	0	496	Remote output data 1	0 to 4095	0	Δ	
497	Remote output data 2	0 to 4095	0	497	Remote output data 2	0 to 4095	0	Δ	

FR-V500 parameter list				FR-A800 compatible parameter				Parameter setting	
Pr.	Name	Setting range	Initial value	Pr.	Name	Setting range	Initial value	Setting	Remarks
505	Speed setting reference	1 to 3600 r/min	1500 r/min	505	Speed setting reference	1 to 590 Hz	60 Hz	×	For the FR-A800, use Pr.144 to change the unit to “r/min”, and then set the same as in the FR-V500 setting.
800	Control system selection	0 to 5, 9, 20	0	800	Control method selection	0 to 6, 9 to 14, 20, 100 to 106, 109 to 114	20	Δ	The initial values for both series differ. When Pr.862 of the FR-V500 is set to "0", set this parameter after adding 100 to the Pr.800 setting of the FR-V500. For other than the above, keep the setting the same as in the FR-V500.
801	Torque characteristic selection	0, 1	1	801	Output limit level	0 to 400%, 9999	9999	×	This parameter’s function is different from that in the FR-V500. For the FR-A800, the torque current command can be limited when the torque is set during torque control.
802	Pre-excitation selection	0, 1	0	802	Pre-excitation selection	0, 1	0	⦿	
803	Constant power range torque characteristic selection	0, 1	0	803	Constant output range torque characteristic selection	0, 1, 2, 10, 11	0	⦿	
804	Torque command source selection	0 to 6	0	804	Torque command source selection	0, 1, 3 to 6	0	×	For the torque command during torque control, the torque is limited by the method selected in Pr.810 of the FR-A800. This function cannot be available in the FR-V500. To disable this function in FR-A800, set Pr.801 = "400" and Pr.803 ≠ "2".
805	Torque command source (RAM)	600 to 1400%	1000%	805	Torque command value (RAM)	600 to 1400%	1000%	×	Setting not required
806	Torque command source (RAM, E^2PROM)	600 to 1400%	1000%	806	Torque command value (RAM, EEPROM)	600 to 1400%	1000%	⦿	
807	Speed limit selection	0, 1, 2	0	807	Speed limit selection	0, 1, 2	0	⦿	
808	Forward rotation speed limit	0 to 3600 r/min	1500 r/min	808	Forward rotation speed limit/speed limit	0 to 400 Hz	60 Hz	×	For the FR-A800, use Pr.144 to change the unit to “r/min”, and then set the same as in the FR-V500 setting.
809	Reverse rotation speed limit	0 to 3600 r/min, 9999	9999	809	Reverse rotation speed limit/reverse-side speed limit	0 to 400 Hz, 9999	9999	×	
810	Torque restriction input method selection	0, 1	0	810	Torque limit input method selection	0, 1	0	⦿	
811	Set resolution switchover	0, 1, 10, 11	0	811	Set resolution switchover	0, 1, 10, 11	0	⦿	
812	Torque limit level (regeneration)	0 to 400%, 9999	9999	812	Torque limit level (regeneration)	0 to 400%, 9999	9999	×	These parameters are used for adjustment. Adjust the setting as required.
813	Torque limit level (3 quadrant)	0 to 400%, 9999	9999	813	Torque limit level (3rd quadrant)	0 to 400%, 9999	9999	×	
814	Torque limit level (4 quadrant)	0 to 400%, 9999	9999	814	Torque limit level (4th quadrant)	0 to 400%, 9999	9999	×	
815	Torque limit level 2	0 to 400%, 9999	9999	815	Torque limit level 2	0 to 400%, 9999	9999	×	
816	Acceleration torque limit level	0 to 400%, 9999	9999	816	Torque limit level during acceleration	0 to 400%, 9999	9999	×	
817	Deceleration torque limit level	0 to 400%, 9999	9999	817	Torque limit level during deceleration	0 to 400%, 9999	9999	×	
818	Easy gain tuning response level setting	1 to 15	2	818	Easy gain tuning response level setting	1 to 15	2	×	
819	Easy gain tuning selection	0, 1, 2	0	819	Easy gain tuning selection	0, 1, 2	0	⦿	
820	Speed control P gain 1	0 to 1000%	60%	820	Speed control P gain 1	0 to 1000%	60%	×	These parameters are used for adjustment. Adjust the setting as required.
821	Speed control integral time 1	0 to 20 s	0.333 s	821	Speed control integral time 1	0 to 20 s	0.333 s	×	
822	Speed setting filter 1	0 to 5 s	0 s	822	Speed setting filter 1	0 to 5 s, 9999	9999	×	
823	Speed detection filter 1	0 to 0.1 s	0.001 s	823	Speed detection filter 1	0 to 0.1 s	0.001 s	×	
824	Torque control P gain 1	0 to 200%	100%	824	Torque control P gain 1 (current loop proportional gain)	0 to 500%	100%	×	
825	Torque control integral time 1	0 to 500 ms	5 ms	825	Torque control integral time 1 (current loop integral time)	0 to 500 ms	5 ms	×	
826	Torque setting filter 1	0 to 5 s	0 s	826	Torque setting filter 1	0 to 5 s, 9999	9999	×	
827	Torque detection filter 1	0 to 0.1 s	0 s	827	Torque detection filter 1	0 to 0.1 s	0 s	×	
828	Model speed control gain	0 to 1000%	60%	828	Model speed control gain	0 to 1000%	60%	×	
830	Speed control P gain 2	0 to 1000%, 9999	9999	830	Speed control P gain 2	0 to 1000%, 9999	9999	×	
831	Speed control integral time 2	0 to 20 s, 9999	9999	831	Speed control integral time 2	0 to 20 s, 9999	9999	×	
832	Speed setting filter 2	0 to 5 s, 9999	9999	832	Speed setting filter 2	0 to 5 s, 9999	9999	×	
833	Speed detection filter 2	0 to 0.1 s, 9999	9999	833	Speed detection filter 2	0 to 0.1 s, 9999	9999	×	
834	Torque control P gain 2	0 to 200%, 9999	9999	834	Torque control P gain 2	0 to 500%, 9999	9999	×	
835	Torque control integral time 2	0 to 500 ms, 9999	9999	835	Torque control integral time 2	0 to 500 ms, 9999	9999	×	
836	Torque setting filter 2	0 to 5 s, 9999	9999	836	Torque setting filter 2	0 to 5 s, 9999	9999	×	
837	Torque detection filter 2	0 to 0.1 s, 9999	9999	837	Torque detection filter 2	0 to 0.1 s, 9999	9999	×	

FR-V500 parameter list				FR-A800 compatible parameter				Parameter setting	
Pr.	Name	Setting range	Initial value	Pr.	Name	Setting range	Initial value	Setting	Remarks
840	Torque bias selection	0 to 3, 9999	9999	840	Torque bias selection	0 to 3, 24, 25, 9999	9999	⦿	These parameters are used for adjustment. Adjust the setting as required.
841	Torque bias 1	600 to 1400%, 9999	9999	841	Torque bias 1	600 to 1400%, 9999	9999	×	
842	Torque bias 2	600 to 1400%, 9999	9999	842	Torque bias 2	600 to 1400%, 9999	9999	×	
843	Torque bias 3	600 to 1400%, 9999	9999	843	Torque bias 3	600 to 1400%, 9999	9999	×	
844	Torque bias filter	0 to 5 s, 9999	9999	844	Torque bias filter	0 to 5 s, 9999	9999	×	
845	Torque bias operation time	0 to 5 s, 9999	9999	845	Torque bias operation time	0 to 5 s, 9999	9999	×	
846	Torque bias balance compensation	0 to 10 V, 9999	9999	846	Torque bias balance compensation	0 to 10 V, 9999	9999	×	
847	Fall-time torque bias terminal 3 bias	0 to 400%, 9999	9999	847	Fall-time torque bias terminal 1 bias	0 to 400%, 9999	9999	×	
848	Fall-time torque bias terminal 3 gain	0 to 400%, 9999	9999	848	Fall-time torque bias terminal 1 gain	0 to 400%, 9999	9999	×	
849	Analog input offset adjustment	0 to 200%	100%	849	Analog input offset adjustment	0 to 200%	100%	⦿	
851	Number of encoder pulses	0 to 4096	2048	851	Number of encoder pulses	0 to 4096	2048	Δ	Keep the setting the same as in the FR-V500. Set "1" in Pr.862 Encoder option selection to set the FR-A8TP for the first motor.
852	Encoder rotation direction	0, 1	1	852	Encoder rotation direction	0, 1, 100, 101	1	Δ	
854	Excitation ratio	0 to 100%	100%	854	Excitation ratio	0 to 100%	100%	⦿	
859	Torque current	0 to, 9999	9999	859	Torque current/Rated PM motor current	0 to 500 A, 9999 (55K or lower) 0 to 3000 A, 9999 (75K or higher)	9999	×	Connect the motor, and perform auto tuning.
862	Notch filter frequency	0 to 31 (V500) 0 to 60 (V500L)	0	1003	Notch filter frequency	0, 8 to 1250 Hz	0	×	Notch frequency differs between the FR-V500 and the FR-A800. For the setting values, refer to section 4.2.
863	Notch filter depth	0 to 3	0	1004	Notch filter depth	0 to 3	0	Δ	
864	Torque detection	0 to 400%	150%	864	Torque detection	0 to 400%	150%	⦿	
865	Low speed detection	0 to 3600 r/min	45 r/min	865	Low speed detection	0 to 590 Hz	1.5 Hz	×	For the FR-A800, use Pr.144 to change the unit to “r/min”, and then set the same as in the FR-V500 setting.
866	Torque monitoring reference	0 to 400%	150%	866	Torque monitoring reference	0 to 400%	150%	⦿	
867	DA1 output filter	0 to 5 s	0.05 s	–	–	–	–	×	
868	Terminal 1 function assignment	0, 1, 2, 5, 9999	0	868	Terminal 1 function assignment	0 to 6, 9999	0	×	When using terminal 3 of the FR-V500 for torque limit input, use terminal 1 of the FR-A800 and set Pr.868="4". (Not required when using terminal 4 as an alternative to terminal 1.) When using terminal 3 of the FR-V500 for torque bias input, use terminal 1 of the FR-A800 and set Pr.868="6". When using terminal 3 of the FR-V500 for torque command input, use terminal 1 of the FR-A800 and set Pr.868="3 or 4".
870	Speed deviation level	0 to 1500 r/min, 9999	9999	285	Overspeed detection frequency (Speed deviation excess detection frequency)	0 to 30 Hz, 9999	9999	×	For the FR-A800, use Pr.144 to change the unit to “r/min”, and then set the same as in the FR-V500 setting.
871	Speed deviation time	0 to 100 s	12 s	853	Speed deviation time	0 to 100 s	1 s	Δ	
873	Speed limit	0 to 3600 r/min	600 r/min	873	Speed limit	0 to 400 Hz	20 Hz	×	For the FR-A800, use Pr.144 to change the unit to “r/min”, and then set the same as in the FR-V500 setting.
874	OLT level setting	0 to 200%	150%	874	OLT level setting	0 to 400%	150%	⦿	
875	Fault definition	0, 1	0	875	Fault definition	0, 1	0	⦿	
876	Thermal relay protector input	0, 1	1	876	Thermal protector input	0, 1	1	⦿	

FR-V500 parameter list				FR-A800 compatible parameter				Parameter setting	
Pr.	Name	Setting range	Initial value	Pr.	Name	Setting range	Initial value	Setting	Remarks
877	Speed feed forward control/ model adaptive speed control selection	0, 1, 2	0	877	Speed feed forward control/ model adaptive speed control selection	0, 1, 2	0	⦿	
878	Speed feed forward filter	0 to 1 s	0 s	878	Speed feed forward filter	0 to 1 s	0 s	×	These parameters are used for adjustment. Adjust the setting as required.
879	Speed feed forward torque limit	0 to 400%	150%	879	Speed feed forward torque limit	0 to 400%	150%	×	
880	Load inertia ratio	0, 1 to 200 times	7	880	Load inertia ratio	0 to 200 times	7	⦿	
881	Speed feed forward gain	0 to 1000%	0%	881	Speed feed forward gain	0 to 1000%	0%	×	This parameter is used for adjustment. Adjust the setting as required.
890	Maintenance output setting time	0 to 9998, 9999	9999	504	Maintenance timer 1 warning output set time	0 to 9998, 9999	9999	⦿	
891	Maintenance output timer	0 to 9998	0	503	Maintenance timer 1	0 (1 to 9998)	0	⦿	
892	Maintenance output signal clear	0	0	–	–	–	–	–	To reset maintenance timer or to clear maintenance timer output signal, write "0" in Pr.503.
900	DA1 terminal calibration	–	–	–	–	–	–	×	Calibrate the parameter as required.
901	DA2 terminal calibration	–	–	C1 (901)	AM terminal calibration	–	–	×	
902	Speed setting terminal 2 bias	0 to 10 V, 0 to 3600 r/min	0 V, 0 r/min	C2 (902)	Terminal 2 frequency setting bias frequency	0 to 590 Hz	0 Hz	×	*When terminal 1 is not used, torque command/limit can be performed by terminal 1. In this case, adjust bias/gain by C16 to C19. When terminal 1 is used, use the option FR-A8AZ. Set the parameter as required. For the details, refer to section "5.12.5 Frequency setting voltage (current) bias and gain" and "5.12.6 Bias and gain for torque (magnetic flux) and set voltage (current)" of the Instruction Manual (Detailed).
				C3 (902)	Terminal 2 frequency setting bias	0 to 300%	0%	×	
903	Speed setting terminal 2 gain	0 to 10 V, 0 to 3600 r/min	10 V, 1500 r/min	125 (903)	Terminal 2 frequency setting gain frequency	0 to 590 Hz	60 Hz	×	
				C4 (903)	Terminal 2 frequency setting gain	0 to 300%	100%	×	
904	Torque command terminal 3 bias	0 to 10 V, 0 to 400%	0 V, 0%	–*	–	–	–	×	
				–*	–	–	–	×	
905	Torque command terminal 3 gain	0 to 10 V, 0 to 400%	10 V, 150%	–*	–	–	–	×	
				–*	–	–	–	×	
917	Terminal 1 bias (speed)	0 to 10 V, 0 to 3600 r/min	0 V, 0 r/min	C12 (917)	Terminal 1 bias frequency (speed)	0 to 590 Hz	0 Hz	×	
				C13 (917)	Terminal 1 bias (speed)	0 to 300%	0%	×	
918	Terminal 1 gain (speed)	0 to 10 V, 0 to 3600 r/min	10 V, 1500 r/min	C14 (918)	Terminal 1 gain frequency (speed)	0 to 590 Hz	60 Hz	×	
				C15 (918)	Terminal 1 gain (speed)	0 to 300%	100%	×	
919	Terminal 1 bias (torque/magnetic flux)	0 to 10 V, 0 to 400%	0 V, 0%	C16 (919)	Terminal 1 bias command (torque/magnetic flux)	0 to 400%	0%	×	
				C17 (919)	Terminal 1 bias (torque/magnetic flux)	0 to 300%	0%	×	
920	Terminal 1 gain (torque/magnetic flux)	0 to 10 V, 0 to 400%	10 V, 150%	C18 (920)	Terminal 1 gain command (torque/magnetic flux)	0 to 400%	150%	×	
				C19 (920)	Terminal 1 gain (torque/magnetic flux)	0 to 300%	100%	×	
990	PU buzzer control	0, 1	1	990	PU buzzer control	0, 1	1	⦿	
991	PU contrast adjustment	0 to 63	58	991	PU contrast adjustment	0 to 63	58	⦿	

4.2. Notch Filter Setting

The notch filter setting and the notch frequency differ between the FR-V500(L) and the FR-A800.
In Pr.1003 of the FR-A800, set a value corresponding to the Pr.862 setting of the FR-V500(L) as shown in the table below.
Adjust the setting again as required.

FR-V500(L) setting		FR-A800 setting	Remarks
Pr.862 setting	Notch frequency (Hz)	Pr.1003 setting (Notch frequency (Hz))	
0	Invalid	Invalid	The fast-response operation must be set. (Set Pr.800 by adding 100 to the setting value of the FR-V500.)
1	1125.0	1125	
2	562.5	563	
3	375.0	375	
4	281.3	281	
5	225.0	225	
6	187.5	188	
7	160.7	161	
8	140.6	141	
9	125.0	125	
10	112.5	113	
11	102.3	102	
12	93.8	94	
13	86.5	87	
14	80.4	80	
15	75.0	75	
16	70.3	70	
17	66.2	66	
18	62.5	63	
19	59.2	59	
20	56.3	56	
21	53.6	54	
22	51.1	51	
23	48.9	49	
24	46.9	47	
25	45.0	45	
26	43.3	43	
27	41.7	42	
28	40.2	40	
29	38.8	39	
30	37.5	38	
31	36.3	36	The setting range of the FR-V500 is "0 to 31".

FR-V500L setting		FR-A800 setting	Remarks
Pr.862 setting	Notch frequency (Hz)	Pr.1003 setting (Notch frequency (Hz))	
32	35.2	35	
33	34.1	54	
34	33.1	33	
35	32.1	32	
36	31.3	31	
37	30.4	30	
38	29.6	30	
39	28.8	29	
40	28.1	28	
41	27.4	27	
42	26.8	27	
43	26.2	26	
44	25.6	26	
45	25.0	25	
46	24.5	25	
47	23.9	24	
48	23.4	23	
49	23.0	23	
50	22.5	23	
51	22.1	22	
52	21.6	22	
53	21.2	21	
54	20.8	21	
55	20.5	21	
56	20.1	20	
57	19.7	20	
58	19.4	19	
59	19.1	19	
60	18.8	19	The setting range of the FR-V500L is "0 to 60".

4.3. Compatibility of the Terminal Response Speed

The response of the input/output terminals of the FR-A800 series is improved compared to the FR-V500 series. Operation timing of the device may differ depending on the usage.
In this case, set Pr.289 (Inverter output terminal filter) and Pr.699 (Input terminal filter) to adjust the terminal response time. Set 5 to 8 ms in Pr.289 and Pr.699 and adjust according to the system.

5. OPTION

The following table shows which FR-V500(L) series options are compatible with the FR-A800 series inverters and the FR-A8TP.

Name		Option model	
		FR-V500(L)	FR-A800 & FR-A8TP
Plug-in type	12-bit digital input	FR-A5AX	FR-A8AX (16 bits)
	16-bit digital input	FR-V5AH	FR-A8AX
	High-resolution analog input function (16 bits) Thermistor interface Additional contact input	FR-V5AX	FR-A8AZ FR-A800 inverter standard input terminals (Binary 6 bits not supported, number of terminals restricted)
	Digital output Additional analog output (10 bits)	FR-A5AY	FR-A8AY
	Relay output (3)	FR-A5AR	FR-A8AR
	Additional open collector output Encoder pulse frequency dividing output	FR-V5AY	FR-A8AY FR-A8TP
	Machine end orientation Pulse train input	FR-A5AP, T-PLG50, T-PLG51 FR-V5AM	FR-A8AP (FR-A8TP (motor end) and A8AP (machine end) required.) Simple orientation control is available using the FR-A8AL. FR-A8TP input terminals
	Position control Pulse train torque command	FR-V5AP	FR-A8TP FR-A8AL
	Torque setting input	Built-in function of the inverter (terminal 3 on the unit)	Built-in function of the FR-A8TP (terminal 1 can be used if it is available) or FR-A8AZ
	Computer link Relay output (1)	FR-A5NR	Built-in function of the inverter (RS-485 terminals) FR-A8AR
	Profibus-DP	FR-A5NPA	FR-A8NP
	Device Net	FR-A5ND	FR-A8ND
	CC-Link	FR-A5NC	FR-A8NC
Stand-alone type	Parameter unit	FR-PU04	Not available. FR-PU07 is available.
	Parameter unit connection cable	FR-CB201, 203, 205	Compatible
	Encoder cable (for dedicated motor)	FR-V5CBL	FR-V7CBL Cables need to be modified to use the FR-V5CBL.
	Intercompatibility attachment	FR-AAT, FR-A5AT	FR-AAT, FR-A5AT
	EMC Directive compliant noise filter	SF	Built-in function of the inverter (EN61800-3 2nd Environment compatible)
	Surge voltage suppression filter	FR-ASF-H	Select the model according to the motor capacity. These options are compatible. If replacing the reactor, use FR-HAL-(H)(*2) and FR-HEL-(H).
	Power factor improving DC reactor	FR-BEL-(H)	
	Power factor improving AC reactor	FR-BAL-(H), MT-BAL-(H)	
	Radio noise filter	FR-BIF-(H)	Compatible
	Line noise filter	FR-BSF01, FR-BLF	Compatible
	Brake resistor	FR-ABR-(H)	Select the model according to the FR-A800 inverter capacity. *1
	BU type brake unit	BU1500 to 15K, H7.5K to 30K	Select the model according to the required braking torque.
	Brake unit	FR-BU-(H), FR-BU2 MT-BU5	Select the model according to the required braking torque. The MT-BU5 is not supported. If replacing the reactor, use FR-BU2.
	Resistor unit	FR-BR-(H), MT-BR5-(H)	Select the model according to the required braking torque.
	FR-CV type power regeneration common converter	FR-CV-(H)7.5K(-AT) to 55K	Select the model according to the FR-A800 inverter capacity. If replacing the reactor, use FR-XC and HC2.
	Stand-alone reactor dedicated for the FR-CV	FR-CVL-(H)7.5K to 55K	
	FR-HC type high power factor converter	FR-HC-(H), MT-HC-(H) FR-HC2-(H)	

*1: The existing brake resistor can be used if the regenerative driving load is not changed.

For some capacity inverters, the crimp terminals need to be changed according to the sizes of the terminal screws for P and PR.

*2: When FR-RC-(H) or MT-RC-(H) is used, use FR-BAL-(H) or MT-BAL-(H).

Name		Option model	
		FR-V500(L)	FR-A800
Manual Controller/ Speed controller	Manual controller	FR-AX	Compatible
	DC tach. follower	FR-AL	Compatible
	Three speed selector	FR-AT	Compatible
	Motorized speed setter	FR-FK	Compatible
	Ratio setter	FR-FH	Compatible
	Speed detector	FR-FP	Compatible
	Master controller	FR-FG	Compatible
	Soft starter	FR-FC	Compatible
	Deviation detector	FR-FD	Compatible
	Preamplifier	FR-FA	Compatible
Others	Pilot generator	QVAH-10	Compatible
	Deviation sensor	YVGC-500W-NS	Compatible
	Frequency setting potentiometer	WA2W 1 kΩ	Compatible
	Frequency meter	YM206NRI 1 mA	Compatible
	Calibration resistor	RV24YN 10 kΩ	Compatible

Instructions when replacing the FR-V500(L) to the FR-A800

* Change the connections as follows:

- Use terminal AM of the FR-A800 instead of terminal DA2 of the FR-V500(L).
  Only one analog terminal (AM) is available. When additional analog output terminals are required, use the plug-in option FR-A8AZ or FR-A8AY.
  The response speed differs by terminal.

- When the automatic restart after instantaneous power failure is enabled (Pr.57 ≠ "9999") for the FR-V500(L), assign the CS signal to any of the input terminals, and short the CS signal terminal and the SD terminal for the FR-A800.

- For torque control of terminal 3, the negative command value is an absolute value. Note that the negative command value input through terminal 1 of FR-A800 is regarded as "0".

- When a pulse train input of the FR-A5AP is being used in the FR-V500(L), use the JOG terminal of the inverter body as a pulse train input terminal for the FR-A800 inverter. Also, note that a resistor is required for connection.

- When PID control is performed by entering the measured value signal (Pr.128="30 or 31") in FR-A500, change the setting to "100 or 101" and set Pr.609 and Pr.610 in FR-A800.

- When the FR-A5AX is used to enter the stop position command under orientation control (Pr.350="2", Pr.360="1"), and the number of encoder pulses (Pr.851) is 2048 or 4096, perform wiring to the FR-A8AX as follows.
  1: When the number of encoder pulses (Pr.851)=2048
  Increase the terminal number by one, for example from X0 to X1, ..., from X11 to X12. (X0 is always open.)
  2: When the number of encoder pulses (Pr.851)=4096
  Increase the terminal number by two, for example from X0 to X2, ..., from X11 to X13. (X0 and X1 are always open.)

- When a relay output with the FR-A5NR is available for the FR-V500(L), use the FR-A8AR as required.
  When the relay terminals of the FR-A5NR are used for remote output (Pr.496, 497), change the bit assignment.

- When additional contact input terminals of the FR-V5AX are used for the FR-V500(L), use terminals on the FR-A800 inverter instead.
  The number of terminals on the FR-A800 inverter is 11 (12 when OH is not used).

- T-TRC50 is the USB memory device of the FR-A800 inverter.

- When the FR-V5NS was used, use FR-A800 (SSCNET III/H) and Motion controller.

- When the FR-V5NE was used, use FR-A800-E and FR Configurator2. Check the functions of the software in advance.

* Enabling the built-in EMC filter increases leakage current.

	Capacitive filter (Radio noise filter)	Input side common mode choke (Line noise filter)	DC reactor
55K or lower	Standard (built-in)	Standard (built-in)	Option (sold separately)
75K or higher	Standard (built-in)	Option (sold separately)	Standard (built-in)

The EMC filter is initially set to disabled (OFF). For the 200 V class 0.4K and 0.75K, the EMC filter is always enabled as the leakage current is small. (The filter ON/OFF connector is not provided.)
The input side common mode choke, which is built in the 55K or lower inverter, is always enabled regardless of the

EMC filter ON/OFF connector setting.

* Set "1" in Pr.862 to set the FR-A8TP for the first motor. In the initial setting, it is set for the second motor and enabled by turning ON the RT signal.

- Main circuit wire size
  Select the size according to the FR-A800 inverter.
  Note that the existing wire can be used if the load conditions are not changed. For some capacity inverters, the crimp terminals need to be changed according to the sizes of the screws for main circuit terminals.

- Breaker (MCCB) and magnetic contactor (MC)
  Select the model according to the FR-A800 inverter.
  Note that the existing breaker (MCCB) and magnetic contactor (MC) can be used if the load conditions are not changed.

Differences between the FR-V500(L) series and the FR-A800 series are as follows.

- The FR-A800 series inverter has a wider capacity range.

V520: 1.5 kW to 55 kW V540: 1.5 kW to 55 kW V520L: 75 kW V540L: 75 kW to 250 kW	⇨	A820: 0.4 kW to 90 kW A840: 0.4 kW to 280 kW For vector control, select a one or two-rank higher inverter capacity of the FR-A800 series against the motor output (kW).

- For the FR-A800 series, more various control methods are selectable according to the purpose.

FR-V500(L)		FR-A800
Vector control		Vector control
Sensorless vector control	⇨	Optimum excitation control
		PM sensorless vector control
		Sensorless vector control
		Advanced magnetic flux vector control
		V/F control (Useful for trial operating the inverter before any setting.)

- Offline auto tuning
  Same as the FR-V500(L), the FR-A800 has two modes for the offline auto tuning: tuning by rotating the motor and tuning without rotating the motor.
  High-accuracy tuning is achieved even without rotating the motor.
  ⇒ Suitable for tuning when a motor and a load machine cannot be separated.

- Plug-in option FR-A8AZ
  When the FR-A8AZ is used, the following input/output interfaces will be available.
  1) Terminal DA1 (±10 VDC output)
  2) Terminal 6 (±10 VDC input)

- For the FR-V500(L), encoder signal loss detection (E.ECT) is enabled. For the FR-A800, set Pr.376 or Pr.855 as required.

- When using the PLG pulse divider output, select the FR-A8TP instead of the FR-A8AP.