MITSUBISHI ELECTRIC

TECHNICAL BULLETIN

GOT-A-0274-A

Precautions for Replacing GOT2000 Series with GOT3000 Series for Japanese Market

■Date of Issue

January 2026

■Relevant Models

GOT2000 Series (GT27 Models) → GOT3000 Series (GT37 Models)

Thank you for your continued support of Mitsubishi Electric Graphic Operation Terminal (GOT).
We released the GOT3000 series, featuring enhanced functions and performance, as the alternatives of the GOT2000 series in December 2025.
We highly recommend replacing your GOT2000 series with the GOT3000 series to take full advantage of its new superior features.

CONTENTS

1 Requests to customers . . . 2
2 Replacement models . . . 2
2.1 GOT . . . 2
2.2 Communication unit and option unit . . . 3
2.3 Options . . . 5
2.4 Communication configuration . . . 5
RS-232 . . . 5
RS-422/485 . . . 5
Ethernet . . . 6
USB cable . . . 6
2.5 Software . . . 6
2.6 Licenses . . . 6
3 Specifications comparison . . . 7
3.1 Hardware specifications . . . 7
Comparison of hardware specifications (external dimensions, LCD, panel color) . . . 7
Precautions for installation and removal . . . 9
Battery . . . 14
Precautions for replacing the hardware . . . 16
3.2 Function specifications . . . 17
Function specifications comparison . . . 17
Detailed function specifications comparison . . . 19
3.3 Screen design software specifications . . . 29
Preparation before project data conversion . . . 29
How to convert project data . . . 29
Unsupported screen design functions . . . 31
Other major changes . . . 32
3.4 Specifications for GT SoftGOT and GT Simulator . . . 38
3.5 Others . . . 39
Manuals . . . 39
Revisions . . . 39
Trademarks . . . 39

MITSUBISHI ELECTRIC CORPORATION

HEAD OFFICE : TOKYO BLDG., 2-7-3, MARUNOUCHI, CHIYODA-KU, TOKYO 100-8310, JAPAN
NAGOYA WORKS : 1-14, YADA-MINAMI 5-CHOME, HIGASHI-KU, NAGOYA 461-8670, JAPAN

1 Requests to customers

The GOT3000 series, featuring enhanced functions and performance, has been released as the alternative to the GOT2000 series since December 2025.
We highly recommend replacing your GOT2000 series with the GOT3000 series to take full advantage of its new superior features.
For the replacement models, refer to the following.
☞ Page 2 GOT

2 Replacement models

The recommended replacement GOT3000 series models have few or no restrictions on the specifications when replacing the GOT2000 series.
Other models can be selected depending on your current system. Carefully check the performance requirements and select an appropriate model. For precautions on the replacement, refer to the relevant chapter and section.

2.1 GOT

When you use the GOT3000 series, the supported screen design software version differs depending on the model and functions.
Prepare the screen design software version that supports the model and functions to be used.
The applicable standards may differ between the GOT3000 series and the GOT2000 series.
For information on the applicable standards, refer to the Mitsubishi Electric FA website.
www.MitsubishiElectric.co.jp/fa

GOT2000 series in use			Recommended replacement GOT3000 series	Panel cut compatibility ○: Compatible	Supported screen design software
					GT Designer3 (GOT3000)
GT27	GT2715	GT2715-XTBA	GT3715-XRBA	○	Ver.1.410C or later
		GT2715-XTBD	GT3715-XRBD	○	Ver.1.410C or later
	GT2712	GT2712-STBA	GT3712-XRBA*1	○	Ver.1.400S or later
		GT2712-STBD	GT3712-XRBD*1	○	Ver.1.400S or later
		GT2712-STWA	GT3712-XRBA*1*2	○	Ver.1.400S or later
		GT2712-STWD	GT3712-XRBD*1*2	○	Ver.1.400S or later
	GT2710	GT2710-STBA	GT3710-XRBA*1	○	Ver.1.400S or later
		GT2710-STBD	GT3710-XRBD*1	○	Ver.1.400S or later
		GT2710-VTBA	GT3710-XRBA*1	○	Ver.1.400S or later
		GT2710-VTBD	GT3710-XRBD*1	○	Ver.1.400S or later
		GT2710-VTWA	GT3710-XRBA*1*2	○	Ver.1.400S or later
		GT2710-VTWD	GT3710-XRBD*1*2	○	Ver.1.400S or later
	GT2708	GT2708-STBA	GT3708-XRBA*1	○	Ver.1.400S or later
		GT2708-STBD	GT3708-XRBD*1	○	Ver.1.400S or later
		GT2708-VTBA	GT3708-XRBA*1	○	Ver.1.400S or later
		GT2708-VTBD	GT3708-XRBD*1	○	Ver.1.400S or later

*1 This is the replacement model with a different resolution.
For information on converting project data for the GOT3000 series, refer to the following.
☞ Page 29 Screen design software specifications
*2 This is the replacement model with different panel color and USB interface specifications.

2.2 Communication unit and option unit

The communication units and option units used for the GOT2000 series and the GOT1000 series can be used as is (except for some units) by using the extension interface converter unit (GT37-IF2000) (sold separately).
Note that only one communication unit or option unit can be installed on the extension interface converter unit.
For the supported communication units and option units, refer to the following table.

Communication unit

Product	GOT2000 unit model	Availability ○: Available (GT37-IF2000 required) —: Not available	Remarks
Ethernet communication unit	GT25-J71E71-100	—	Use the interface built in the GOT.
Serial communication unit (RS-232)	GT15-RS2-9P	○	—
Serial communication unit (RS-422/485)	GT15-RS4-9S	○	—
	GT15-RS4-TE	○	—
CC-Link IE Controller Network communication unit	GT15-J71GP23-SX	○	—
CC-Link IE TSN Communication unit	GT25-J71GN13-T2	○	—
CC-Link IE Field Network communication unit	GT15-J71GF13-T2	○	—
CC-Link communication unit	GT15-J61BT13	○	—
Wireless LAN communication unit	GT25-WLAN	—	—
Serial multi-drop connection unit	GT01-RS4-M	—	—
Field network adapter unit	GT25-FNADP	—	—

Option unit

Product	GOT2000 unit model	Availability ○: Available (GT37-IF2000 required) —: Not available	Remarks
External I/O unit	GT15-DIO	○	—
	GT15-DIOR	○	—
Printer unit	GT15-PRN	—	—
Multimedia unit	GT27-MMR-Z	—	Use the digital image recording/playback function.
Video input unit	GT27-V4-Z	—	Use either of the following functions. • Web camera with digital image input function*1 • Network camera with digital image input function*2 for four-channel display
RGB input unit	GT27-R2	—	Use a video capture device (USB converter) with the digital image input function.*1
Video/RGB input unit	GT27-V4R1-Z	—	Use either of the following functions. • Web camera with digital image input function*1 • Network camera with digital image input function*2 for four-channel display
RGB output unit	GT27-ROUT	—	Use the digital image output interface built in the GOT.*1
Digital image output unit	GT27-VHOUT	—	Use the digital image output interface built in the GOT.*1
Sound output unit	GT15-SOUT	—	Speakers with a stereo mini jack cannot be used. Use a USB speaker.*1

*1 For details, refer to the following manuals.
📖GOT3000 Series User's Manual (Connection)
📖GT Designer3 (GOT3000) Screen Design Manual
*2 The multimedia function license is required.

2.3 Options

Some options (sold separately) for the GOT2000 series can be used.
For the supported options, refer to the following table.
○: Usable, —: Not usable

Product	Availability	Remarks
Protective sheet	—	Products for the GOT2000 series cannot be used because the front face panel design and USB port opening position differ. Use the product for the GOT3000 series.
Stand	○	When the screen size of the currently used GOT2000 series (GT27 model) is the same as that of the GOT3000 series (GT37 model) to be replaced, products for the GOT2000 series can be used as is.
SD memory card	○	Products for the GOT2000 series can be used as is.
Battery	○	The battery (GT11-50BAT) for the GOT2000 series and the GOT1000 series can be used as-is.

2.4 Communication configuration

RS-232

RS-232 communication used in the GOT2000 series is also supported by the GOT3000 series.
The built-in RS-232/422/485 interface of the GOT3000 series is used for both RS-232 and RS-422/485 communication. For RS-232 communication, the pin layout differs from that of the RS-232 interface of the GOT2000 series.
The availability of cables used with the GOT2000 series depends on the communication interface or communication unit to be used. For details, refer to the following table.

Existing GOT2000 series interface	Replacement GOT3000 series interface/cable
GOT's Built-in RS-232 interface	RS-232/422/485 interface built in the GOT When using existing cables, a separately sold conversion cable (GT35-C02HR2-9P) is required. When creating a new cable and using it, refer to the following manual for the cable connection diagram. 📖GOT3000 Series User's Manual (Connection) Set the terminating resistor setting switch of the GOT3000 series to [Not used].
Serial communication unit (GT15-RS2-9P)	When using the serial communication unit (GT15-RS2-9P), a separately sold extension interface converter unit (GT37-IF2000) is required. Existing cables can be used as is.

RS-422/485

RS-422/485 communication used in the GOT2000 series is also supported by the GOT3000 series.
Existing cables for the GOT2000 series can be used as is for the GOT3000 series.
When the terminating resistor DIP switch is set to [Disabled] in the GOT2000 series, set the terminating resistor setting switch to [Not used] in the GOT3000 series.
When the terminating resistor DIP switch is set to [Enabled] in the GOT2000 series, set the terminating resistor setting switch to [330Ω] or [100Ω] in the GOT3000 series.
For details, refer to the following manual.
📖GOT3000 Series User's Manual (Connection)

Ethernet

The Ethernet cables for the GOT2000 series can be used as is for the GOT3000 series.
Connect the Ethernet cable connected to the Ethernet standard port to port 1.
Connect the Ethernet cable connected to the Ethernet extended port to port 2.

USB cable

For USB cables, refer to the following table.

Existing cable for the GOT2000 series			Replacement cable for the GOT3000 series	
Product		**Model**	**Availability**	**Remarks**
USB cable	Data transfer cable	GT09-C30USB-5P	×	Cannot be used because the shape of the USB connector has changed from Mini-B to Type-C for the GOT3000 series. For the cables available for the GOT3000 series, refer to the following Technical Bulletin. 📖List of Valid Devices for the GOT3000 Series (GOT-A-0233)
Panel-mounted USB port extension		GT14-C10EXUSB-4S	○	—

2.5 Software

You can use GT Designer3 (GOT3000) for free by updating your GT Works3 to a version compatible with the GOT3000 series.

2.6 Licenses

The following licenses for the GOT2000 series cannot be used for the GOT3000 series.
Purchase a license for the GOT3000 series.

Name	GOT2000 series license model	Availability	GOT3000 series license model*1*2	Delivery type	Remarks
License key for GT SoftGOT	GT27-SGTKEY-U	×	GT3S-SGTKEYA1-□	License	Use the license for GT SoftGOT3000.
GOT Mobile function license for GOT2000	GT25-WEBSKEY	×	GT30-WEBSKEYA1-□	License	Use the license for the GOT3000 series.
GOT Mobile function license for GT SoftGOT2000	SGT2K-WEBSKEY	×	GT3S-WEBSKEYA1-□	License	Use the license for GT SoftGOT3000.
VNC server function license	GT25-VNCSKEY	×	GT30-VNCSKEYA1-□	License	Use the license for the GOT3000 series.
License for the remote personal computer operation function (Ethernet)	GT25-PCRAKEY	×	GT30-PCRAKEYA1-□	License	Use the license for the GOT3000 series.

*1 The number of licenses are indicated in □ in the table.
*2 For the license authentication method, refer to the following manuals.
📖GT SoftGOT3000 User's Manual
📖GT Designer3 (GOT3000) Screen Design Manual

3 Specifications comparison

The following shows the differences in the specifications between the GOT2000 series and the GOT3000 series.

3.1 Hardware specifications

Comparison of hardware specifications (external dimensions, LCD, panel color)

Lineup

Screen size	GOT2000 series			GOT3000 series		
	GT27 models			GT37 models		
	LCD resolution	Display color	Panel color	LCD resolution	Display color	Panel color
15"	XGA	65536 colors	Black	XGA	16 million colors	Black
12.1"	SVGA	65536 colors	Black/white	XGA	16 million colors	Black
10.4"	SVGA/VGA	65536 colors	Black/white	XGA	16 million colors	Black
8.4"	SVGA/VGA	65536 colors	Black	XGA	16 million colors	Black

Unit: mm (in.)

Screen size	GOT2000 series (GT27 models)	GOT3000 series (GT37 models)
15"	GT2715-XTB□ 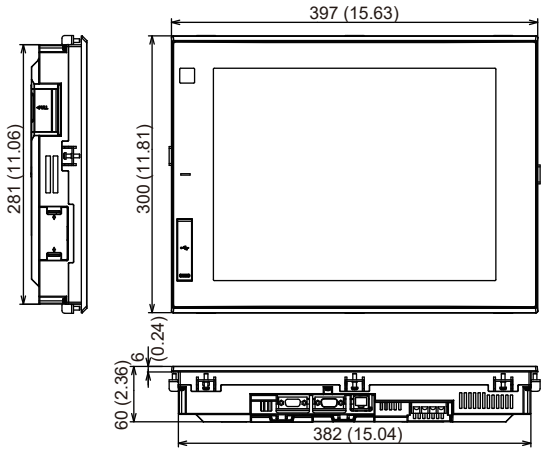 	GT3715-XRB□ 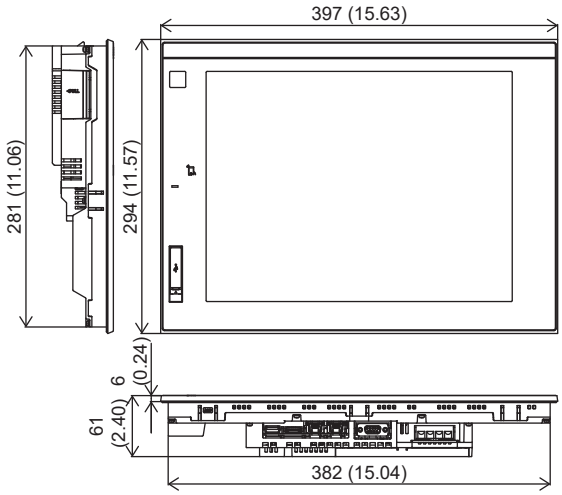
12.1"	GT2712-STB□ GT2712-STW□ 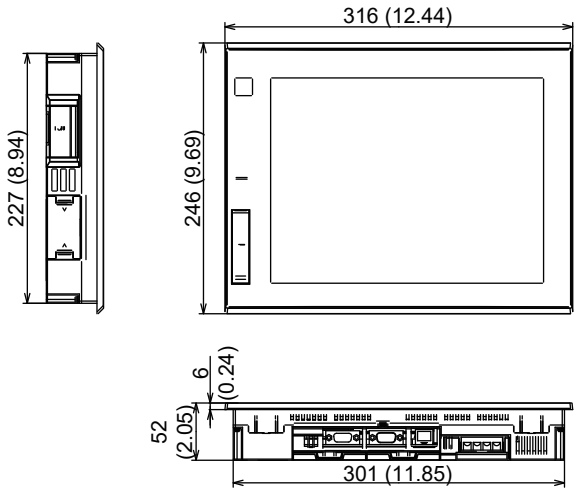 	GT3712-XRB□ 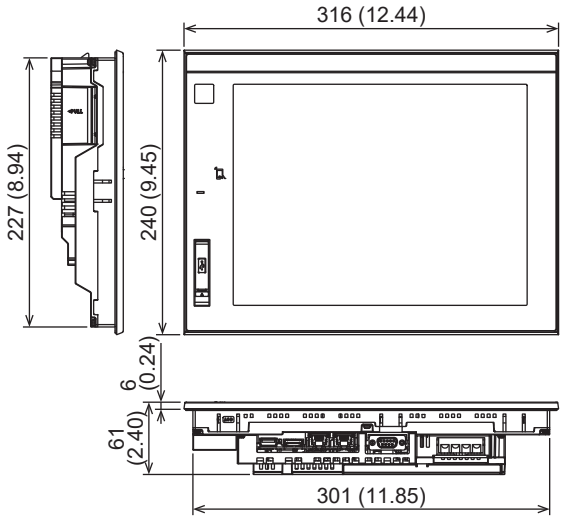

Screen size	GOT2000 series (GT27 models)	GOT3000 series (GT37 models)
10.4"	GT2710-□TB□ GT2710-VTW□ 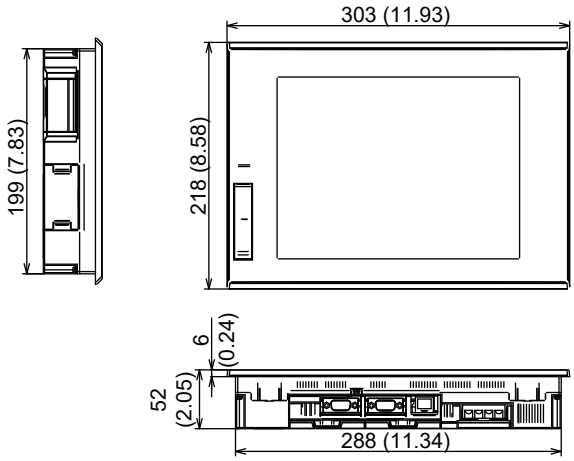	GT3710-XRB□ 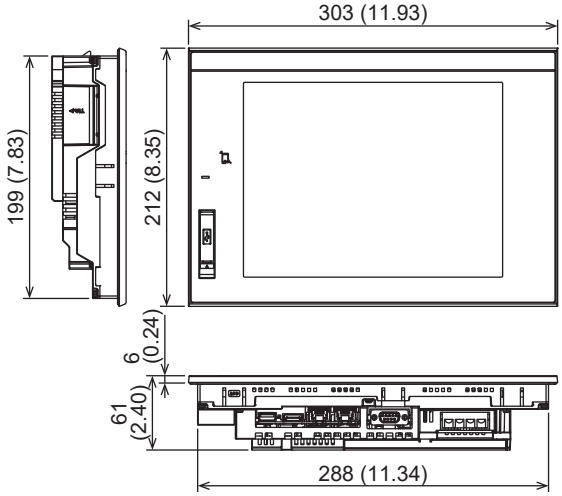
8.4"	GT2708-□TB□ 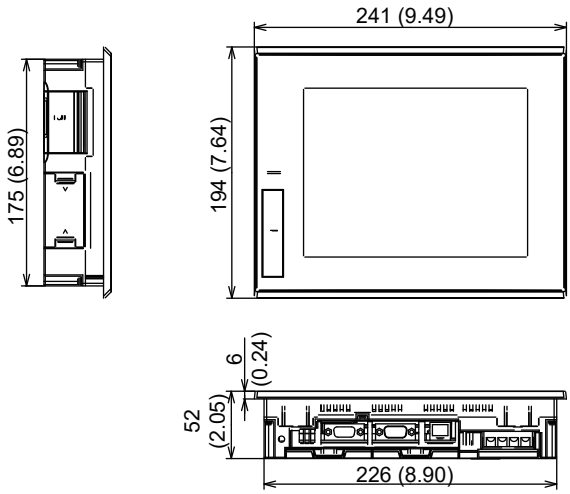	GT3708-XRB□ 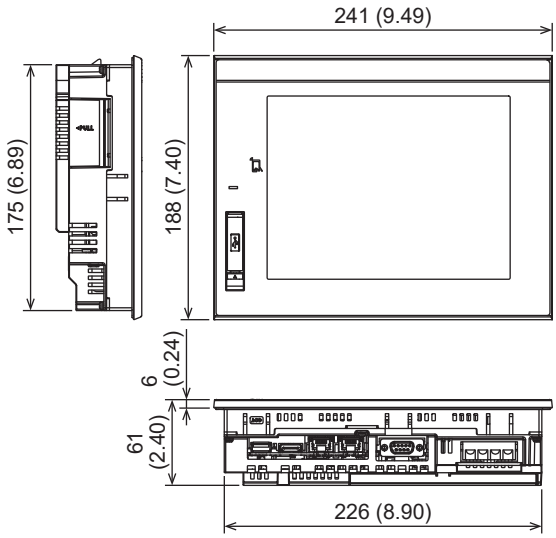

Precautions for installation and removal

Precautions for installation

The following shows the differences between the GOT2000 series and the GOT3000 series.

Screen size	GOT2000 series	GOT3000 series
12.1" 10.4" 8.4"	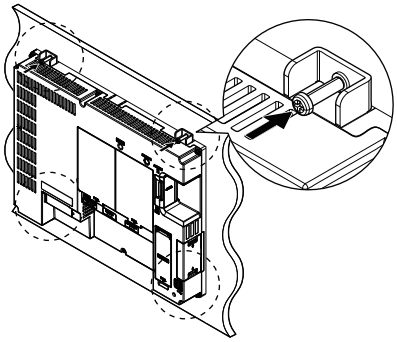 Installation fitting: 4 pieces (top and bottom)*1	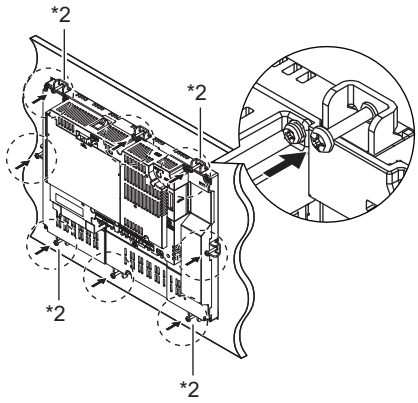 Installation fitting: 8 pieces (top, bottom, left, and right)*1

*1 The installation fittings differ between the GOT2000 series and the GOT3000 series.
When installing the GOT3000 series, use the installation fittings for the GOT3000 series.

*2 It is also possible to fix the product with the four installation fittings in the same way as the GOT2000 series.
Note that the product cannot satisfy the IPX6 and NEMA Type 4X protective structure.

Precautions for removal

The GOT3000 series has a temporary fixing tab to prevent the product from falling from the panel during installation.
Press the temporary fixing tab at the upper rear of the GOT and remove the GOT from the panel opening.

Screen size	GOT2000 series	GOT3000 series
12.1" 10.4" 8.4"	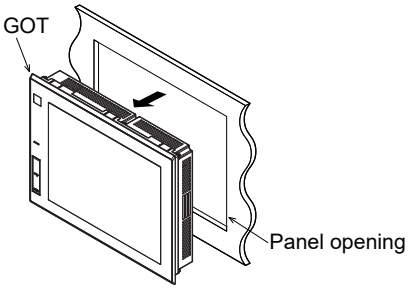	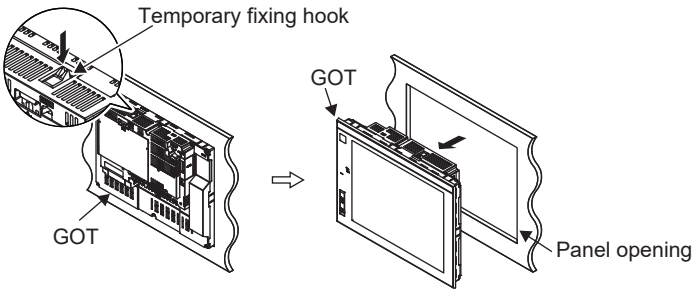

Panel cutting dimensions

The following shows the panel cutting dimensions when installing the GOT.

Unlike the GOT2000 series, the GOT3000 series requires 15 mm of space on each side (top, bottom, left, and right) for the GOT installation fittings.

The panel cutting machining tolerance is changed from +2/0 to +1/0; however, the GOT2000 series still can be replaced with the GOT3000 series.

After replacing with the GOT3000 series, there are no restrictions on functions such as the protective structure due to differences in panel cutting machining tolerances.

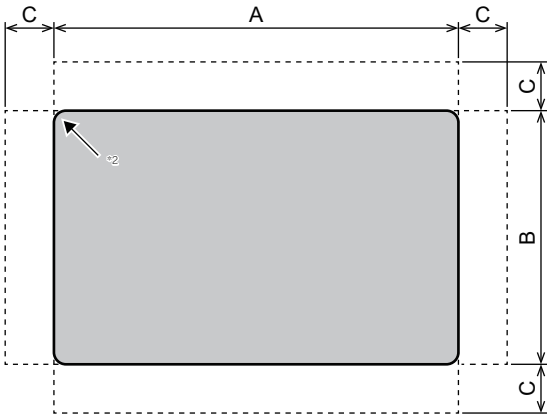

Horizontal

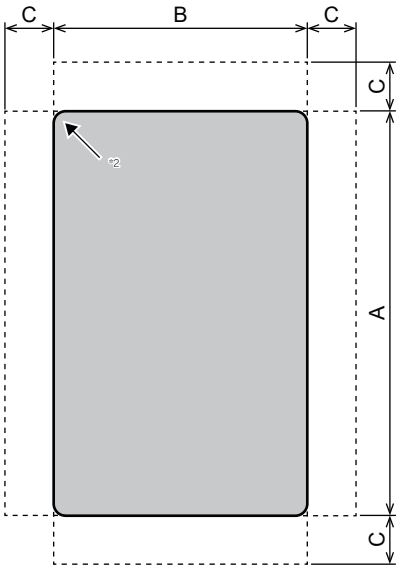

Vertical

Unit: mm (in.)

Screen size	GOT2000 series				GOT3000 series			
	Model	Panel cutting dimensions			Model	Panel cutting dimensions		
		A	B	C*1		A	B	C
15"	GT2715-XTB□	383.5 (15.10)$^{+1}_{0}$ $^{(0.04)}_{(0)}$	282.5 (11.12)$^{+1}_{0}$ $^{(0.04)}_{(0)}$	10 (0.39) or more	GT3715-XTB□	383.5 (15.10)$^{+1}_{0}$ $^{(0.04)}_{(0)}$	282.5 (11.12)$^{+1}_{0}$ $^{(0.04)}_{(0)}$	15 (0.59) or more
12.1"	GT2712-STB□ GT2712-STW□	302 (11.89)$^{+2}_{0}$ $^{(0.08)}_{(0)}$	228 (8.98)$^{+2}_{0}$ $^{(0.08)}_{(0)}$	10 (0.39) or more	GT3712-XTB□	302 (11.89)$^{+1}_{0}$ $^{(0.04)}_{(0)}$	228 (8.98)$^{+1}_{0}$ $^{(0.04)}_{(0)}$	15 (0.59) or more
10.4"	GT2710-□TB□ GT2710-VTW□	289 (11.38)$^{+2}_{0}$ $^{(0.08)}_{(0)}$	200 (7.87)$^{+2}_{0}$ $^{(0.08)}_{(0)}$	10 (0.39) or more	GT3710-XTB□	289 (11.38)$^{+1}_{0}$ $^{(0.04)}_{(0)}$	200 (7.87)$^{+1}_{0}$ $^{(0.04)}_{(0)}$	15 (0.59) or more
8.4"	GT2708-□TB□	227 (8.94)$^{+2}_{0}$ $^{(0.08)}_{(0)}$	176 (6.93)$^{+2}_{0}$ $^{(0.08)}_{(0)}$	10 (0.39) or more	GT3708-XTB□	227 (8.94)$^{+1}_{0}$ $^{(0.04)}_{(0)}$	176 (6.93)$^{+1}_{0}$ $^{(0.04)}_{(0)}$	15 (0.59) or more

*1 The GOT2000 series requires the installation fittings on only the top and bottom.

*2 Corner radius must be R2 or less (this does not affect replacement from the GOT2000 series to the GOT3000 series).

Installation dimensions

When installing the GOT, distances from other devices are required as shown below.

The external dimensions of the GOT3000 series have been changed from those of the GOT2000 series.

☞ Page 7 Hardware specifications

Unit: inches

Screen size	Model	Change in external dimensions relative to the GOT2000 series		
		Height	Width	Thickness
15"	GT3715-XTB□	-6	0	+1
12.1"	GT3712-XTB□	-6	0	+9
10.4"	GT3710-XTB□	-6	0	+9
8.4"	GT3708-XTB□	-6	0	+9

Therefore, the GOT3000 series requires a shorter distance from other devices in the height and width directions, making replacement from the GOT2000 series possible.

The E dimension must be provided in the thickness direction as shown below.

Depending on the units and cables used, a distance more than the specified dimensions may be required.

Install the GOT with consideration of the connector dimensions and the cable bend radius.

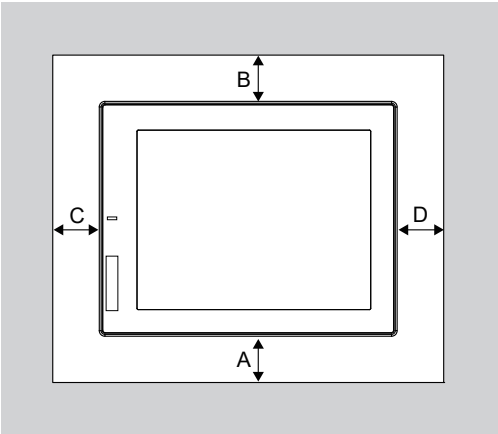

Horizontal

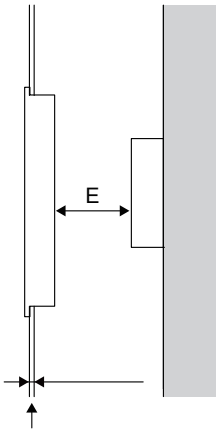

Panel thickness: 1.6 to 4 (0.06 to 0.16)

Comparison of installation dimensions between GT27 and GT37 models

Unit: mm (in.)

Item			GT27				GT37			
			GT2715	GT2712	GT2710	GT2708	GT3715	GT3712	GT3710	GT3708
A	Serial communication unit	GT15-RS2-9P	48 (1.89) or more [18 (0.71) or more][*1]				49 or more (1.93 or more)			
		GT15-RS4-9S								
		GT15-RS4-TE								
	CC-Link IE Controller Network communication unit	GT15-J71GP23-SX	48 (1.89) or more [18 (0.71) or more][*1]				49 or more (1.93 or more)			
	CC-Link IE TSN communication unit	GT25-J71GN13-T2	48 (1.89) or more [18 (0.71) or more][*1]				49 or more (1.93 or more)			
	CC-Link IE Field Network communication unit	GT15-J71GF13-T2	48 (1.89) or more [18 (0.71) or more][*1]				49 or more (1.93 or more)			
	CC-Link communication unit	GT15-J61BT13	48 (1.89) or more [18 (0.71) or more][*1]				49 or more (1.93 or more)			
	External I/O unit	GT15-DIO	48 (1.89) or more [18 (0.71) or more][*1]				49 or more (1.93 or more)			
		GT15-DIOR	48 (1.89) or more [18 (0.71) or more][*1]				49 or more (1.93 or more)			
B			78 (3.07) or more [18 (0.71) or more][*1]				79 or more (3.11 or more)			

<table>
<tr><th colspan="2" rowspan="2">Item</th><th colspan="4">GT27</th><th colspan="4">GT37</th></tr>
<tr><th>GT2715</th><th>GT2712</th><th>GT2710</th><th>GT2708</th><th>GT3715</th><th>GT3712</th><th>GT3710</th><th>GT3708</th></tr>
<tr><td rowspan="2">C</td><td>Memory card (when not used)</td><td colspan="4">50 (1.97) or more [20 (0.79) or more]*1</td><td colspan="4" rowspan="2">50 or more (1.97 or more)</td></tr>
<tr><td>Memory card (when used)</td><td colspan="2">50 (1.97) or more [20 (0.79) or more]*1</td><td>50 (1.97) or more [20 (0.79) or more]*1</td><td>50 (1.97) or more</td></tr>
<tr><td colspan="2">D</td><td colspan="4">50 (1.97) or more [20 (0.79) or more]*1</td><td colspan="4">50 or more (1.97 or more)</td></tr>
<tr><td colspan="2">E</td><td colspan="4">100 (3.94) or more [20 (0.79) or more]*1*2</td><td colspan="4">100 or more (3.94 or more)</td></tr>
</table>

*1 The dimensions within [ ] apply when no equipment radiating noise (such as a contactor) or heat is installed near the GOT.
Note that the GOT3000 series does not guarantee these dimensions.
For details, contact your local sales office.

*2 To open or close the battery cover, at least 72 mm is required.

Installing the GOT to the attachment

The attachment used for the GOT2000 series can be used for the GOT3000 series.
Note that when installing the GOT to the attachment (GT15-60ATT-87 or GT15-60ATT-77), the installation fitting at the bottom center of the GOT interferes with the attachment; therefore, the fitting cannot be used.

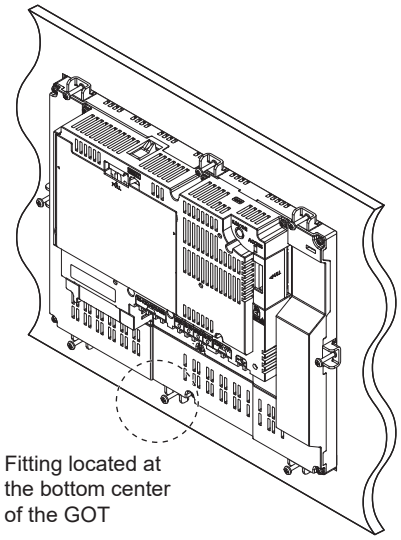

Installing the GOT to the stand

The stand used for the GOT2000 series can be used for the GOT3000 series.
Note that when installing the GT3710 to the stand (GT15-70STAND), the installation fittings on the left and right of the GOT interfere with the stand; therefore, the fittings cannot be used.
Secure the GOT using the installation fittings at the top and bottom.

Battery

You can use the same battery[*1] (GT11-50BAT) for both the GOT2000 and the GOT3000 series. However, the installation method differs for some models (except for the GT2708). [*2]

*1 The battery for the GOT3000 series is sold separately.
*2 When replacing the GT2708 with the GT3708, the installation method is the same.

For information on installing or removing the battery, refer to the following manuals.

📖GOT2000 Series User's Manual (Hardware)

📖GOT3000 Series User's Manual (Hardware)

Since SRAM has been changed to nonvolatile RAM, a battery is not required to retain data.

Install a battery only when saving the GOT clock data during a power failure.

GOT2000 series

■GT2715, GT2712, GT2710

<Battery installation position: GOT rear face>

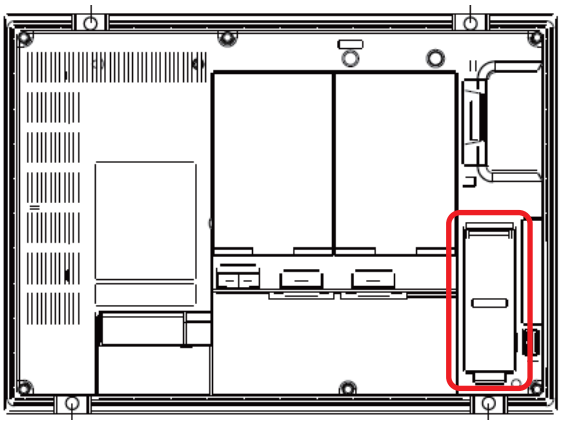

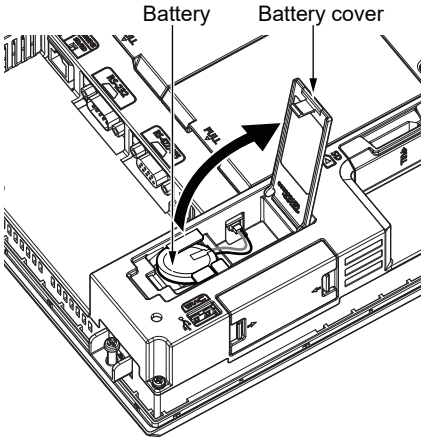

GOT3000 series

■GT3715, GT3712, GT3710

<Battery installation position: Inside the SD card cover on the GOT rear face>

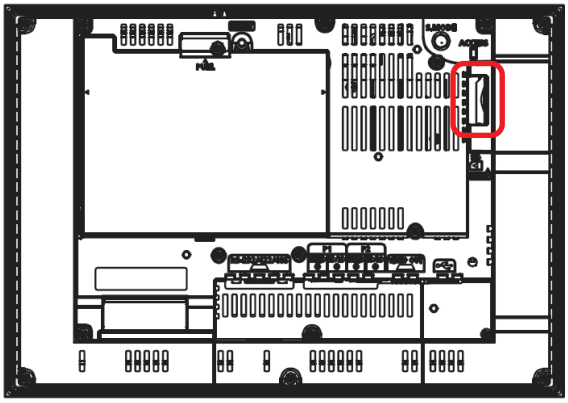

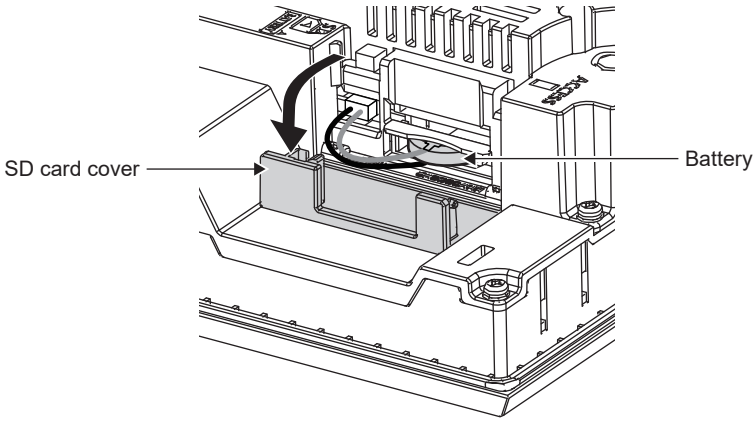

Precautions for replacing the hardware

The following summarizes the precautions for replacing the GOT2000 series with the GOT3000 series.

Item	GT27 model → GT37 model
External dimensions Panel cutting	The thickness increases by 1 mm for the GT3715. The thickness increases by 9 mm for the GT3712, GT3710, and GT3708. Check the rear face space when installing the control panel. When using the GT37-IF2000 with a communication unit/option unit, the thickness increases by 8.6 mm for the GT3715 compared to when using the GOT2000 with the communication unit/option unit. The thickness increases by 16.6 mm for the GT3712, GT3710, and GT3708. * The height is 6 mm smaller, and the width is the same. The panel cutting dimensions are the same, and the product can be installed as is.
Touch panel	Note that simultaneous two-point press is not available for GT37 models with a resistive touch panel. If replacement with a model that supports simultaneous two-point press is required, use a model with a capacitive (PCAP) touch panel. For details, refer to the following catalog. 📖GOT3000 series catalog (L(NA)08957ENG)
Power LED	The power LED on GT37 models has been changed. Refer to the table shown in the precautions section.
Communication with a personal computer (GT Works3)	The USB connector shape has changed from Mini-B to Type-C. For the validated models of the USB cables, refer to the following Technical Bulletin. 📖List of Validated Devices Applicable for the GOT3000 Series (GOT-A-0233)
Serial interface	The connector pin layout of the built-in RS-232 interface differs between the GT37 models and the GT27 models. To use the existing cable, a conversion cable (sold separately) is required. *For RS-422/485, the existing cable can be used as is. For details, refer to the following. ☞ Page 5 Communication configuration Note that the GT37 models do not support 5 V power supply via RS-232.
Communication unit/option unit	When using the communication unit/option unit for the GOT2000 with GT37 models, the extension interface converter unit (GT37-IF2000) is required. * Some communication units/option units for the GOT2000 series cannot be used with the GOT3000 series. (For details, refer to Section 2.2.)
Number of installed communication units/option units	Up to three communication units/option units can be installed on GT27 models, whereas only one communication unit/option unit can be installed on GT37 models.
Installation fitting	Installation fittings for the GOT2000 series cannot be used. Use the installation fittings included with the GOT3000 series.
Number of installation fittings	GT27 models: 4 pieces, GT37 models: 8 pieces Install all of them.

Precautions

The power LED on GT37 models has been changed as shown below.

Item	GT27 model	GT37 model
When power is supplied	Lit in blue	Lit in lime green
When the screen saver is active	Lit in orange	Blinking in lime green (fade-in and fade-out)
When the backlight fails	Blinking in orange or blue	Blinking in lime green
When power is not supplied	OFF	OFF

3.2 Function specifications

Function specifications comparison

Some GOT2000 series functions are not supported, or have been integrated or renamed.
For details, refer to the following.
☞ Page 17 Functions not supported by the GOT3000 series
☞ Page 18 Function integration and function name change
For details on the GOT3000 series functions, refer to the following.
📖GT Designer3 (GOT3000) Screen Design Manual
📖GOT3000 Series User's Manual (Utility & Maintenance Functions)

Functions not supported by the GOT3000 series

Extended function	
Wireless LAN	Network drive
System launcher (servo network)	Sequence program monitor (SFC)
FX ladder monitor	Remote personal computer operation (Serial)
Printer (PictBridge)	Printer (Serial)
Network monitor	Servo amplifier monitor
Drive recorder	Servo amplifier graph
Q motion monitor	CNC monitor
CNC data I/O	CNC machining program edit
CNC monitor 2	Motion program editor
Motion program I/O	R motion SFC monitor
Q motion SFC monitor	FX list editor
Vision sensor monitor	Recipe operation
MELSEC-L troubleshooting	—

Communication driver	
Bus connection A/QnA	Ethernet(SIEMENS S7), Gateway
AJ71QC24, MELDAS C6*	Multidrop (Slave)
Azbil DMC50	OMRON THERMAC/INPANEL NEO
KOYO KOSTAC/DL	JTEKT TOYOPUC-PC
SHARP JW	TOSHIBA PROSEC T/V
SHIBAURA MACHINE TCmini	Panasonic MINAS A4
Panasonic MINAS A5	HITACHI IES HIDIC H
HITACHI IES HIDIC H (Protocol 2)	HITACHI S10mini/S10V
HIRATA HNC	FUJI MICREX-F
Muratec MPC	Muratec MCR
YASKAWA GL	YASKAWA CP9200(H)
YASKAWA CP9300MS (MC compatible)	GE (SNP-X)
LS Industrial Systems MASTER-K	MEI Nexgenie
DeviceNet	PROFIBUS DP

Functions to be supported in the future

Extended function	
Report	Printer (ESC/P-R)
Printer (PCL5)	MES interface
Device monitor	Log viewer
File print	

Communication driver	
Ethernet(TOSHIBA nv), Gateway	Ethernet(HITACHI IES), Gateway
Ethernet(HITACHI), Gateway	AJ71C24/UC24
MELSEC-WS	CC-Link (G4)
IAI X-SEL	IAI ROBO CYLINDER
OMRON SYSMAC	Serial (KEYENCE)
SHINKO TECHNOS controller	CHINO MODBUS device
Panasonic MEWNET-FP	Panasonic MEWTOCOL-7
FUJI temperature controller/digital indication controller	FUJI MICREX-SX SPH
YASKAWA MP2000/MP900/CP9200SH	YOKOGAWA FA500/FA-M3/STARDOM
YOKOGAWA GREEN/UT100/UT2000/UTAdvanced	RKC SR Mini HG (MODBUS)
AB SLC500, AB 1:N connection	AB MicroLogix
AB Control/CompactLogix	SICK Flexi Soft
SIEMENS S7-300/400	SIEMENS S7-200

Other function	
Security key authentication	

Function integration and function name change

GOT2000 series function name	GOT3000 series function name
Outline font	UD font
Standard font	
HQ font	
TrueType font	
Video display	Digital image input
RGB display	
RGB output	Digital image output
HDMI output	
Multimedia	Digital image recording/playback*2
Gateway (mail)	Mail send
Gateway (FTP server)	FTP server
Sequence program monitor (Ladder)	Sequence program monitor (Q/L ladder)
Parts movement	Parts display*1

*1 This item changes to [Animation].
*2 The multimedia function license is required.

Detailed function specifications comparison

Detailed function specifications comparison

The following shows the differences in functions between the GOT2000 series and the GOT3000 series.
The precautions for replacing the GOT2000 series with the GOT3000 series in the table below apply when [Enable the antialiasing] is selected.
—: Supported, ●: To be supported in the future, ×: Not supported

Type	Function name		Schedule	GOT2000 series → GOT3000 series Precautions for replacement
	Main category	Subcategory		
Figure	Settings	Pattern	—	The fill pattern has been changed. For details, refer to the following. ☞ Page 28 Fill pattern
	Line			When [Graphic Setting] is set to [GOT Graphic Ver.2] and the line width is one dot in the GOT2000 series, antialiasing is not applied.
	Freeform line			
	Polygon			
	Circle (including semicircle)			
	Arc (including elliptical arc)			
	Sector			
	Scale			
	Piping			—
	Paint			When the [Enable the antialiasing] setting is enabled, this item cannot be used. If you are using paint, disable the setting of [Type Setting] - [Basic Setting] - [Enable the antialiasing] when replacing with the GOT3000 series.
	Image file import			—
	Capture			—
	Text			—
	Logo text			—
Text	Font	Standard font	—	The font is replaced with the UD font.
		HQ font	—	
		TrueType font	—	
		Outline font	—	
		Windows font	—	—
	KANJI region		—	—
Screen	Base screen		—	—
	Window screen	Overlap	—	—
		Superimpose		—
		Key window		—
	Report screen	Report output destination (Printer)	●	This setting is deleted.
		Report output destination (File)		
	Mobile screen		—	—
	Dialog window		—	The [Overlap of Objects] setting is deleted.

Type	Function name		Schedule	GOT2000 series → GOT3000 series Precautions for replacement
	Main category	Subcategory		
Common settings	Basic settings	Model	—	—
		Setup direction		—
		Graphics setting		This setting is deleted. To change the [GOT Graphic Ver.1] setting, disable the [Enable the antialiasing] setting. For the effects of the [Enable the antialiasing] setting, refer to the following. 📖GT Designer3 (GOT3000) Screen Design Manual
		Package folder name		—
		Use the gesture function		—
		Expand base screen sizes		—
	Language and font settings	Standard language	—	When replacing with the GOT3000 series, select [Type Setting] and select Gothic or Mincho for [Standard Style] in [Language and Font Setting].
		Use easily-distinguishable font for 0 (zero) and I		—
	Outline font	Alphanumeric and kana	—	The font is replaced with the UD font.
		Kanji		
		Hangul		
		Chinese (Simplified) character code		
	Windows font	Enable the antialiasing to smooth jagged text edges	—	—
	Option setting	Check for overlapping objects in the GOT	×	This setting is deleted. In the GOT3000 series, this setting is always disabled, regardless of the setting in the GOT2000 series.
		Adjust object display order in GOT to the one in GT Designer3	—	This setting is deleted. In the GOT3000 series, the display order is the same as in GT Designer3, regardless of the setting in the GOT2000 series.
Common settings (GOT environmental settings)	Screen switching/windows		—	—
	Switching between languages		—	—
	Dialog window		—	—
	Key window		—	—
	System information		—	—
	Security	Level authentication	—	—
		Operator authentication	—	The format of the operator management information file is different.
	Operation log		—	The report settings[*1] are deleted.
	Internal device retention[*4]		—	—
	KANA-KANJI/Pinyin conversion		—	—
	Startup logo		—	—

Type	Function name		Schedule	GOT2000 series → GOT3000 series Precautions for replacement
	Main category	Subcategory		
Common settings (GOT setup)	Basic settings	Display setting/language setting	—	—
		GOT ID No.	—	—
		Operation setting/utility call key	—	—
		USB device/host	—	—
		Time setting*4	—	When the time is changed by the GS device, the clock data of external equipment is changed accordingly (time notification).
		Transparent mode setting	—	—
		GOT internal device monitor	—	—
	Advanced settings	SoftGOT-GOT link	—	—
		VNC server	—	—
		Sequence program monitor	—	—
		Backup/restore	—	—
		Wireless LAN setting	×	This setting is deleted. The wireless LAN communication unit cannot be used.
		System launcher	—	—
		iQSS utility	—	—
		Network drive	×	This setting is deleted.
Common settings (GOT Ethernet settings)	GOT IP address setting		—	The wireless LAN settings are deleted.
	GOT Ethernet common settings			—
	IP filter function			—
Common settings (Controller settings)	Channel settings		—	Connectable equipment and models differ for the GOT3000 series. For details, refer to the following manual. 📖GOT3000 Series User's Manual (Connection)
	Routing information		—	—
	Gateway	Communication settings	—	—
		Gateway server		—
		Gateway client		—
		Mail		In the GOT3000 series, these functions are independent of the gateway function. The settings are retained.
		FTP server		
		File transfer		
	MELSEC redundant		—	—
	Station number switching		—	—
	Buffer memory unit number switching		—	—

Type	Function name		Schedule	GOT2000 series → GOT3000 series Precautions for replacement
	Main category	Subcategory		
Common settings (Peripheral device settings)	Personal computer (data transfer)		—	—
	Barcode	Serial*2	—	—
		USB host		—
	RFID*2		—	Format 12 is not supported.
	Remote personal computer operation	Ethernet	—	Use two system windows.
		Serial	×	Remote personal computer operation (Serial) is not supported. Use remote personal computer operation (Ethernet).
	VNC server		—	—
	Video/RGB input		—	Use either of the following functions. • Web camera with digital image input function • Video capture device (USB converter) with digital image input function*3 • Network camera with digital image input function for four-channel display
	Multimedia		—	Use the digital image recording/playback function. The multimedia function license is required. The [Save to File Server] setting is deleted. If [Playback File Time Specification Device] is set, the setting is deleted because the device assignment method is different. Configure the settings again in GT Designer3 (GOT3000).
	External I/O / operation panel		—	—
	HDMI/RGB output		—	Use the built-in digital image output interface.
	Printer	USB	×	This setting is deleted.
		Serial	×	
		Ethernet	●	
	Sound output		—	Use a USB speaker.

Type	Function name		Schedule	GOT2000 series → GOT3000 series Precautions for replacement
	Main category	Subcategory		
Common settings (Other settings)	GOT network interaction		—	—
	GOT Mobile settings		—	—
	I/F communication settings		—	The [Enable the 5V power supply] setting for [RS232 Setting] is not available for the GOT3000 series.
	Label		—	—
	Comment		—	—
	Alarm*4	Alarm common settings	—	—
		User alarm monitoring		The alarm print settings*1 are deleted.
		System alarm monitoring		—
		Alarm popup display		—
	Logging*4		—	—
	Recipe*4	Recipe common settings	—	—
		Recipe	—	Correct the format to match that of the GOT3000 series. For details, refer to the following. ☞ Page 26 Recipe file (CSV or Unicode text)
	Script	Script	—	—
		Script list		—
		Script symbol		—
		Object script symbol		—
	Device data transfer		—	—
	Trigger action		—	—
	Time action		—	—
	Hard copy	File	—	—
		Printer	●	This setting is deleted.
		File + Printer		
	MES interface		●	This setting is deleted.
	Application selection		—	—
	Parts		—	—
	Sound		—	—

Type	Function name		Schedule	GOT2000 series → GOT3000 series Precautions for replacement
	Main category	Subcategory		
Object	Object script		—	The font is replaced with [UD Font]; therefore, the display may change when the arguments [Character X scale factor] and [Character Y scale factor] are specified in d_textout and d_commentout.
	Touch switch		—	—
	Lamp		—	—
	Numerical display, numerical input		—	—
	Date display, time display		—	—
	Comment display		—	—
	Parts display		—	—
	Parts movement		—	This item is replaced by [Parts Display], and its [Animation] settings are applied.
	Historical data list display		—	—
	Alarm display	Alarm display (user)	—	—
		Alarm display (system)		—
		Simple alarm display		—
		System alarm display		—
	Graph	Line graph	—	—
		Trend graph		—
		Bar graph		—
		Statistics bar graph		—
		Statistics pie graph		—
		Scatter graph		—
		Historical trend graph		—
	Graphical meter		—	—
	Meter	Level	—	—
		Panel meter		—
	Slider		—	—
	Document display		—	—
	Video/RGB display		—	The menu name is changed to [Digital Image Input]. Replace it with a network camera with digital image input function for four-channel display.
	Script parts		—	—
	Set overlay screen		—	—
	Window position		—	—
	Key window object		—	—
	Printing	Numeric printing	●	This setting is deleted.
		Text printing		
		Bit comment printing		
		Word comment printing		
Communication	Write to the GOT		—	—
	Read from the GOT		—	—
	Verification with the GOT		—	—
	Communication settings		—	—
	Batch write to multiple GOTs		—	—
	Write to the memory card		—	—
	Write CSP+ data for iQSS		—	CSP+ data for iQSS in the GOT2000 series cannot be used. Output the data to the memory card again using GT Designer3 (GOT3000).
	Communication with GT01-RS4-M		×	—

Type	Function name		Schedule	GOT2000 series → GOT3000 series Precautions for replacement
	Main category	Subcategory		
Diagnostics	GOT diagnostics		—	—
Maintenance function	Sequence program monitor (Ladder)		—	—
	Intelligent module monitor		—	QSCPU and LCPU are not supported.
	Backup/restore		—	Data backed up with the GOT2000 series cannot be used. Back up data again with the GOT3000 series.
	R motion monitor		—	MR-J3 series servo amplifiers are not supported. No special data writing is required. Error codes are displayed in hexadecimal on the current value monitor screen, error list axis specification screen, positioning monitor screen, and servo monitor screen. (On the GOT2000 series, they are displayed in decimal.)
	iQSS utility		—	CSP+ data for iQSS in the GOT2000 series cannot be used. Output the data to the memory card again using GT Designer3 (GOT3000).

*1 To be supported in the future
*2 If [Extend I/F-1(2nd)] or [Extend I/F-1(3rd)] is set, reset the connection destination I/F.
*3 For details, refer to the following manual.
📖GOT3000 Series User's Manual (Connection)
*4 Since SRAM has been changed to nonvolatile RAM, a battery is not required to retain data.
Install a battery only when saving the GOT clock data during a power failure.

Recipe file (CSV or Unicode text)

The format of the recipe file (CSV or Unicode text) differs between the GOT2000 series and the GOT3000 series.
To use a GOT2000 series recipe file (CSV or Unicode text) in the GOT3000 series, modify the file to match the GOT3000 series format.

1. Convert the file to GOT3000 series project data and execute the recipe.
2. A recipe file for the GOT3000 series (CSV or Unicode text) is generated on the specified drive.
3. Copy the device values from the GOT2000 series recipe file to the recipe file generated in Step 2.

GOT2000 series recipe file

:GT2K_RECIPE	0					
:RECIPE_ID	1					
:RECIPE_NAME	RECIPE1					
:DEVICE_NUM	8					
:RECORD_NUM	2					
:DATE_ORDER	YYYY/MM/DD hh:mm:ss					
:LOCAL_TIME	GMT+09:00					
:TIME_INF_ORDER	L					
	DEV_COMMENT	DEV_TYPE	DISP_TYPE	DEV_SIZE	1	2
:RECORD_NAME					PRO1	PRO2
:RECORD_ATTR					P	
:UPDATE					2025/1/31 10:30:15	2025/1/31 10:30:15
1	STD A	BIN16	DEC	1	454	400
2	CNT1	BIN16	UNSIGNED_DEC	1	10000	40000
3	LINE A	BIN16	DEC	1	10000	40000
4	LINE B	BIN16	DEC	1	10000	40000
5	LINE C	BIN16	DEC	1	10000	40000
6	CNT2	BIN32	DEC	2	120000000	200000000
7	TARGET1	BIN32	DEC	2	100000000	500000000
8	TARGET2	BIN32	UNSIGNED_DEC	2	200000000	600000000

GOT3000 series recipe file

Copy these values to the GOT3000 series recipe file.

:GT3K_RECIPE	0					
:RECIPE_ID	1					
:RECIPE_NAME	RECIPE1					
:DEVICE_NUM	8					
:RECORD_NUM	2					
:DATE_ORDER	YYYY/MM/DD hh:mm:ss					
:LOCAL_TIME	UTC+09:00					
:TIME_INF_ORDER	L					
	DEV_COMMENT	DEV_TYPE	DISP_TYPE	DEV_SIZE	1	2
:RECORD_NAME					PRO1	PRO2
:RECORD_ATTR					P	
:UPDATE					2025/1/31 10:30:15	2025/1/31 10:30:15
1	STD A	BIN16	DEC	1	454	400
2	CNT1	BIN16	UNSIGNED_DEC	1	10000	40000
3	LINE A	BIN16	DEC	1	10000	40000
4	LINE B	BIN16	DEC	1	10000	40000
5	LINE C	BIN16	DEC	1	10000	40000
6	CNT2	BIN32	DEC	2	120000000	200000000
7	TARGET1	BIN32	DEC	2	100000000	500000000
8	TARGET2	BIN32	UNSIGNED_DEC	2	200000000	600000000

Fill pattern

The paint fill pattens of the screen background, figures, and objects are changed; therefore, the following display difference occurs between the GOT2000 series and the GOT3000 series.

Ex.
Fill pattern 23

GOT2000 series screen	GOT3000 series screen
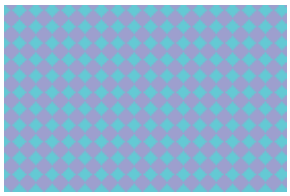	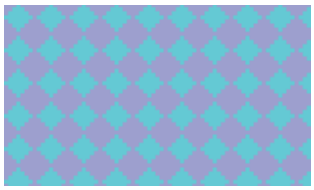

Utility

The utility screen image has been changed.
Vertical display is now supported.

Ex.
GOT basic settings

GOT2000 series	GOT3000 series
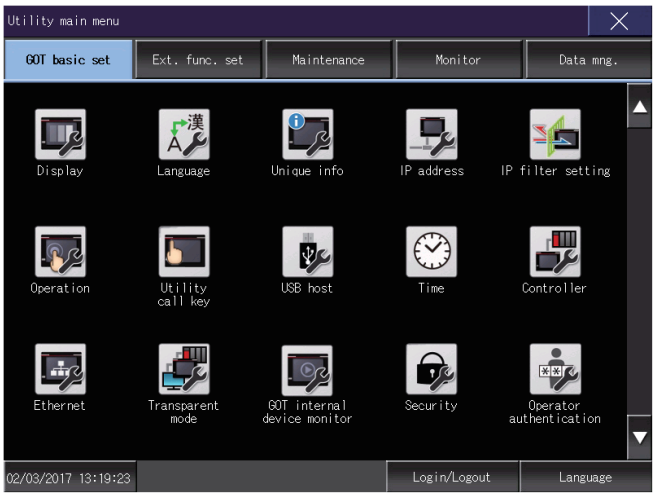	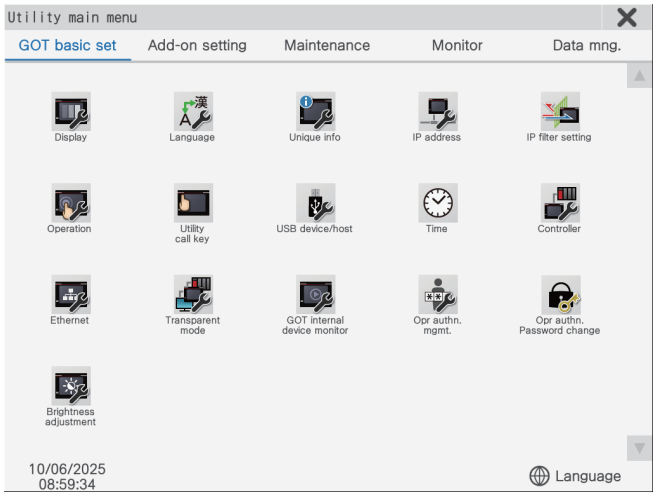

3.3 Screen design software specifications

The project data used in the GOT2000 series can be converted to GOT3000 series project data and used as is.

Precautions

- GT Works3 Version 1.410C is used in this explanation.
- Project data converted for the GOT3000 series cannot be converted back to project data for the GOT2000 series.

Preparation before project data conversion

The following software must be installed on the personal computer.

When reading GOT2000 series project data from the GOT

Install GT Designer3 (GOT2000) with GT Works3 Version 1.340E or later, or Data Transfer Tool.
This is unnecessary if the project data to be converted exists on the personal computer.

When converting the project data to GOT3000 series project data

Install GT Designer3 (GOT3000) with GT Works3 Version 1.410C or later.
For information on the installation, refer to the following manual. (The software can be downloaded from the Mitsubishi Electric FA website.)
📖GT Works3 Installation Instructions (DVD version) (BCN-P5999-1792)
If you have an older version of GT Works3, download the latest version from the Mitsubishi Electric FA website.

How to convert project data

1. If the GOT2000 series project data to be converted exists on the personal computer, check its storage location.
If the project data to be converted does not exist on the personal computer, connect the GOT2000 series to the personal computer, then read and save the project data using GT Designer3 (GOT2000) or Data Transfer Tool.

2. Open the project data from Step 1 in GT Designer3 (GOT3000), and select [Convert the project to GOT3000 data and edit it in GT Designer3 (GOT3000)].

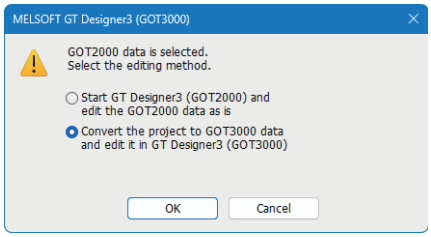

3. Select the GOT3000 series GOT type for replacement, and press [OK].

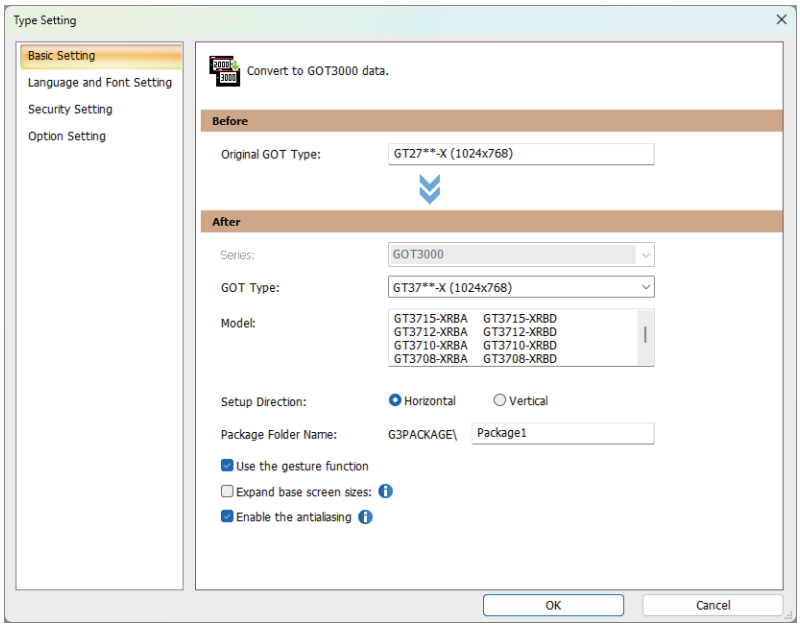

4. After conversion to GOT3000 series project data, GT Designer3 (GOT3000) starts.
The conversion details can be checked in the output window.

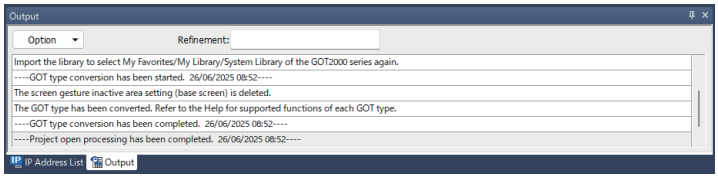

Unsupported screen design functions

- Printing function
- Saving script data as a separate file (external data)
- New project wizard
- iQ Works interaction

Precautions

The settings of the functions not supported by the GOT3000 series are deleted during conversion to GOT3000 series project data. For information on function compatibility between the GOT3000 series and the GOT2000 series, refer to the following.
☞ Page 17 Function specifications
If the screen is enlarged during conversion to GOT3000 series project data, the coordinate positions of windows and objects will change.
If coordinates are specified using device values or similar methods, it is necessary to modify ladder programs, scripts, or other elements. Check the converted screen data before use.
The library for GOT2000 series project data can be used as is. However, note that conversion to GOT3000 project data does not replace the library with a high-resolution one.
For the system library, selecting [Edit Objects with Fixed Frame Width] → [Collective Edit] allows you to reconfigure the images for all shapes, thereby improving the quality of the entire project.
Alternatively, reconfiguring the shapes will set a library suitable for the screen resolution.
In the GOT3000 series, the following fonts are discontinued and replaced with UD/UDP fonts.
After conversion to GOT3000 series project data, these fonts are converted to UD or UDP fonts, and the width and coordinates of text figures and objects are changed.
Check the converted screen data before use.

- 6× 8 dots
- Standard font
- HQ font
- TrueType font
- Outline font

When [External File (External Data)] is set as the script data storage destination, data is converted to [Project Data (Internal Data)] during conversion to GOT3000 series project data.

Other major changes

Parts Movement

This object has been integrated into parts display in the GOT3000 series screen design software.
The move format parameters for parts movement are set in the animation tag of the parts display.

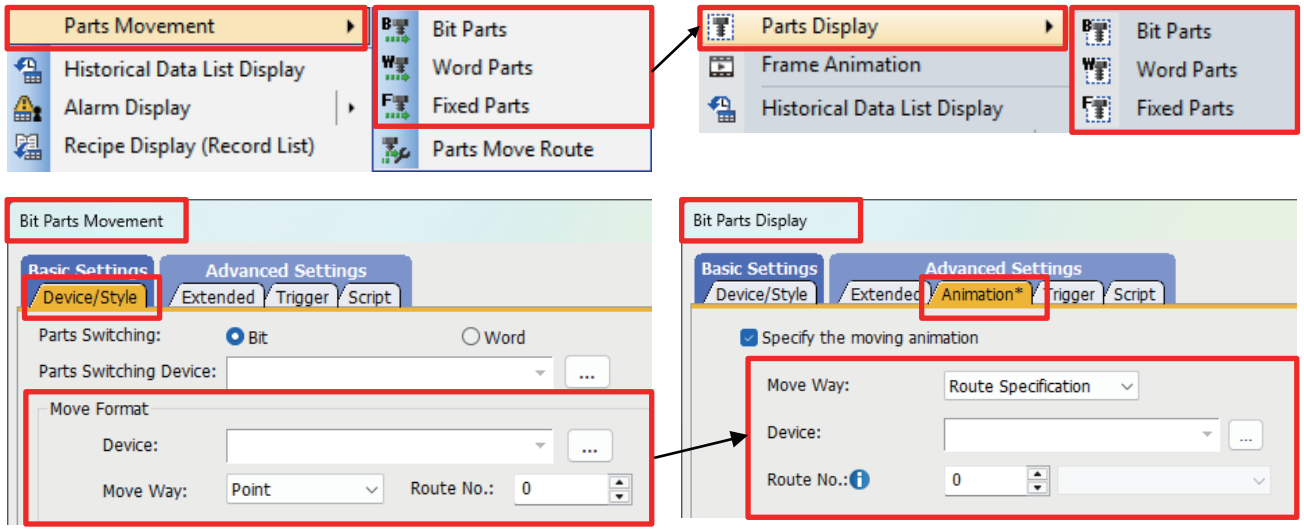

GOT2000 series GOT3000 series

Parts Move Route

The setting locations and function names have been changed in the GOT3000 series screen design software.

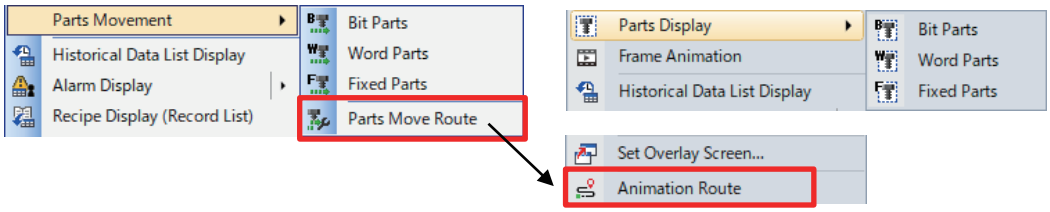

GOT2000 series GOT3000 series

Data Check, Label Check, Data Size, Simulator

The setting locations and function names have been changed in the GOT3000 series screen design software.

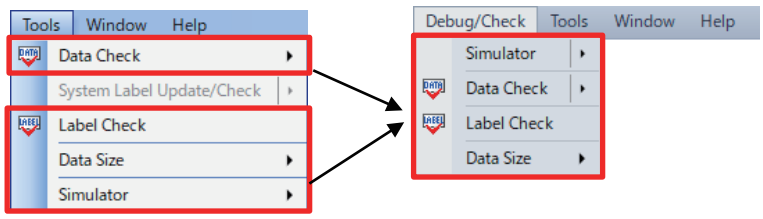

GOT2000 series GOT3000 series

In the GOT3000 series screen design software, GX Simulator3 automatically starts when the simulator is started.
Before starting the simulator, specify the target GX Works3 project in advance via [Debug/Check] - [Simulator] - [Setting].
If a GX Works3 project is not specified (default), GX Simulator3 automatically starts with a blank ladder project.

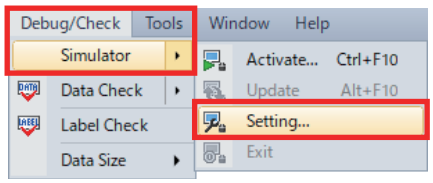

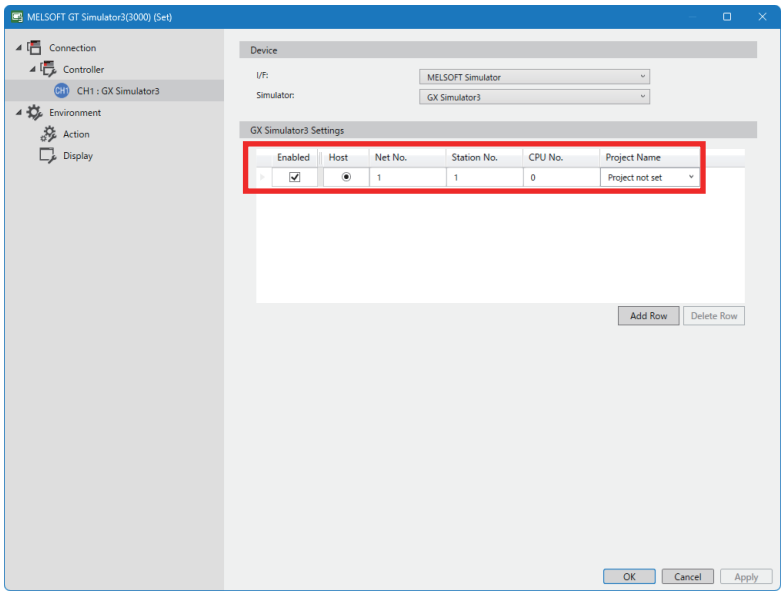

Controller settings

If any of the following communication drivers is set in the GOT2000 series screen design software, the settings are deleted. Configure the settings again in the GOT3000 series screen design software.

—: Supported, ●: To be supported in the future, ×: Not supported

Manufacturer	Model	Driver	Schedule	Remarks
Mitsubishi Electric Corporation	MELSEC iQ-R, RnMT/NC/RT, CR800-D	Ethernet(MITSUBISHI ELECTRIC), Gateway	—	When the Ethernet module is AJ71QE71, RCPU is applied.
	MELSEC iQ-L	Ethernet(MITSUBISHI ELECTRIC), Gateway	—	When the Ethernet module is AJ71QE71, RCPU is applied.
	MELSEC iQ-F	Ethernet(MITSUBISHI ELECTRIC), Gateway	—	When the Ethernet module is AJ71QE71, RCPU is applied.
	MELSEC-Q/QS, Q17nD/M/NC/DR/DSR, CRnD-700	Multidrop (Slave)	×	Not available for the GOT3000 series. The setting is deleted.
		CC-Link (G4)	●	The setting is deleted. Configure the settings again in the GOT3000 series screen design software.
		Ethernet(MITSUBISHI ELECTRIC), Gateway	—	When the Ethernet module is AJ71QE71, RCPU is applied.
	MELSEC-Q, Q17nD/M/DR/DSR, CRnD-700	Multidrop (Slave)	×	Not available for the GOT3000 series. The setting is deleted.
		CC-Link (G4)	●	The setting is deleted. Configure the settings again in the GOT3000 series screen design software.
	MELSEC-QnA, MELDAS C6*	Serial (MELSEC)	×	Not available for the GOT3000 series. The setting is deleted.
		AJ71QC24, MELDAS C6*		
		Multidrop (Slave)		
		CC-Link (G4)		
		Ethernet(MITSUBISHI ELECTRIC), Gateway		
		MELSECNET/H		
		CC-Link IE Controller Network		
		CC-Link IE Field Network		
		CC-Link Ver.2 (ID)		
		Q bus connection		
		Bus connection A/QnA		
	MELSEC-QnA	Serial (MELSEC)	×	Not available for the GOT3000 series. The setting is deleted.
		Multidrop (Slave)		
		CC-Link (G4)		
	MELSEC-L	Multidrop (Slave)	×	Not available for the GOT3000 series. The setting is deleted.
		CC-Link (G4)	●	The setting is deleted. Configure the settings again in the GOT3000 series screen design software.
		Ethernet(MITSUBISHI ELECTRIC), Gateway	—	When the Ethernet module is AJ71QE71, RCPU is applied.
	MELSEC-A	MELSEC-A	×	Not available for the GOT3000 series. The setting is deleted.
		AJ71C24/UC24	●	The setting is deleted. Configure the settings again in the GOT3000 series screen design software.
		Multidrop (Slave)	×	Not available for the GOT3000 series. The setting is deleted.
		MELSECNET/H	×	Not available for the GOT3000 series. The setting is deleted.
		Bus connection A/QnA	×	Not available for the GOT3000 series. The setting is deleted.
		Ethernet(MITSUBISHI ELECTRIC), Gateway	—	When the Ethernet module is AJ71QE71, RCPU is applied.

Manufacturer	Model	Driver	Schedule	Remarks
Mitsubishi Electric Corporation	MELSEC-FX	Multidrop (Slave)	×	Not available for the GOT3000 series. The setting is deleted.
	MELSEC-WS	MELSEC-WS	●	Not available for the GOT3000 series. The setting is deleted.
	MELIPC	Ethernet(MITSUBISHI ELECTRIC), Gateway	—	When the Ethernet module is AJ71QE71, RCPU is applied.
	MELSERVO-J2M-P8A	MELSERVO-J4, J3, J2S/M, JE	×	Not available for the GOT3000 series. The setting is deleted.
	MELSERVO-J2M-*DU		×	Not available for the GOT3000 series. The setting is deleted.
	MELSERVO-J2S-*A		×	Not available for the GOT3000 series. The setting is deleted.
	MELSERVO-J2S-*CP		×	Not available for the GOT3000 series. The setting is deleted.
	MELSERVO-J2S-*CL		×	Not available for the GOT3000 series. The setting is deleted.
	FREQROL 500/700/800 series, sensorless servo	FREQROL 500/700/800, sensorless servo	—	The driver name will be changed. Not available for the FR-500 series.
	FREQROL 800	FREQROL 800	×	Not available for the GOT3000 series. The setting is deleted.
		Ethernet(FREQROL), Gateway		
IAI	IAI X-SEL Controller	IAI X-SEL	●	The setting is deleted. Configure the settings again in the GOT3000 series screen design software.
	IAI ROBO CYLINDER	IAI ROBO CYLINDER		
Azbil	Azbil DMC50	Azbil DMC50	×	Not available for the GOT3000 series. The setting is deleted.
OMRON	OMRON SYSMAC	OMRON SYSMAC	●	The setting is deleted. Configure the settings again in the GOT3000 series screen design software.
	OMRON THERMAC/INPANEL NEO	OMRON THERMAC/INPANEL NEO	×	Not available for the GOT3000 series. The setting is deleted.
KEYENCE	KEYENCE KV-700/1000/3000/5000/7000/8000	Serial (KEYENCE)	●	The setting is deleted. Configure the settings again in the GOT3000 series screen design software.
KOYO EI	KOYO KOSTAC/DL	KOYO KOSTAC/DL	×	Not available for the GOT3000 series. The setting is deleted.
JTEKT	JTEKT TOYOPUC-PC series	JTEKT TOYOPUC-PC	×	Not available for the GOT3000 series. The setting is deleted.
SHARP	SHARP JW	SHARP JW	×	Not available for the GOT3000 series. The setting is deleted.
SHINKO TECHNOS	SHINKO TECHNOS controller series	SHINKO TECHNOS controller	●	The setting is deleted. Configure the settings again in the GOT3000 series screen design software.
CHINO	CHINO MODBUS device	CHINO MODBUS device	●	The setting is deleted. Configure the settings again in the GOT3000 series screen design software.
TOSHIBA	TOSHIBA PROSEC T/V series	TOSHIBA PROSEC T/V	×	Not available for the GOT3000 series. The setting is deleted.
	TOSHIBA Unified Controller nv series	Ethernet(TOSHIBA nv), Gateway	●	The setting is deleted. Configure the settings again in the GOT3000 series screen design software.
SHIBAURA MACHINE	SHIBAURA MACHINE TCmini	SHIBAURA MACHINE TCmini	×	Not available for the GOT3000 series. The setting is deleted.
Panasonic	Panasonic MEWNET-FP series	Panasonic MEWNET-FP	●	The setting is deleted. Configure the settings again in the GOT3000 series screen design software.
	Panasonic FP7 series	Panasonic MEWTOCOL-7	●	The setting is deleted. Configure the settings again in the GOT3000 series screen design software.
	Panasonic MINAS A4 series	Panasonic MINAS A4	×	Not available for the GOT3000 series. The setting is deleted.
	Panasonic MINAS A5 series	Panasonic MINAS A5	×	Not available for the GOT3000 series. The setting is deleted.

Manufacturer	Model	Driver	Schedule	Remarks
HITACHI	HITACHI IES EHV series	Ethernet(HITACHI IES), Gateway	●	The setting is deleted. Configure the settings again in the GOT3000 series screen design software.
	HITACHI IES HIDIC H series	HITACHI IES HIDIC H	×	Not available for the GOT3000 series. The setting is deleted.
		HITACHI IES HIDIC H (Protocol 2)	×	Not available for the GOT3000 series. The setting is deleted.
	HITACHI S10VE	Ethernet(HITACHI), Gateway	●	The setting is deleted. Configure the settings again in the GOT3000 series screen design software.
	HITACHI S10mini/S10V	HITACHI S10mini/S10V	×	Not available for the GOT3000 series. The setting is deleted.
HIRATA	HIRATA HNC	HIRATA HNC	●	The setting is deleted. Configure the settings again in the GOT3000 series screen design software.
FUJI temperature controller/ digital controller	FUJI temperature controller/digital indication controller	FUJI temperature controller/digital indication controller	●	The setting is deleted. Configure the settings again in the GOT3000 series screen design software.
	FUJI MICREX-F series	FUJI MICREX-F	×	Not available for the GOT3000 series. The setting is deleted.
	FUJI MICREX-SX SPH	FUJI MICREX-SX SPH	●	The setting is deleted. Configure the settings again in the GOT3000 series screen design software.
Muratec	Muratec MPC/MCR	Muratec MPC	●	The setting is deleted. Configure the settings again in the GOT3000 series screen design software.
		Muratec MCR	●	The setting is deleted. Configure the settings again in the GOT3000 series screen design software.
YASKAWA	YASKAWA GL/PROGIC8	YASKAWA GL	×	Not available for the GOT3000 series. The setting is deleted.
	YASKAWA CP9200(H)	YASKAWA CP9200(H)	×	Not available for the GOT3000 series. The setting is deleted.
	YASKAWA CP9300MS (MC compatible)	YASKAWA CP9300MS (MC compatible)	×	Not available for the GOT3000 series. The setting is deleted.
	YASKAWA MP2000/MP900/ CP9200SH series	YASKAWA MP2000/MP900/ CP9200SH	●	The setting is deleted. Configure the settings again in the GOT3000 series screen design software.
YOKOGAWA	YOKOGAWA STARDOM/FA500/ FA-M3 series	YOKOGAWA FA500/FA-M3/ STARDOM	●	The setting is deleted. Configure the settings again in the GOT3000 series screen design software.
	YOKOGAWA GREEN/UT100/ UT2000/UTAdvanced	YOKOGAWA GREEN/UT100/UT2000/ UTAdvanced	●	The setting is deleted. Configure the settings again in the GOT3000 series screen design software.
RKC	RKC SR Mini HG	RKC SR Mini HG (MODBUS)	●	The setting is deleted. Configure the settings again in the GOT3000 series screen design software.
AB	AB SLC500	AB SLC500, AB 1:N connection	●	The setting is deleted. Configure the settings again in the GOT3000 series screen design software.
	AB MicroLogix series	AB MicroLogix	●	The setting is deleted. Configure the settings again in the GOT3000 series screen design software.
	AB MicroLogix series (Extended)	AB MicroLogix (Extended)	●	The setting is deleted. Configure the settings again in the GOT3000 series screen design software.
	AB Control/CompactLogix	AB Control/CompactLogix	●	The setting is deleted. Configure the settings again in the GOT3000 series screen design software.
GE	GE series 90	GE (SNP-X)	×	Not available for the GOT3000 series. The setting is deleted.
LS Industrial Systems	LS Industrial Systems MASTER-K	LS Industrial Systems MASTER-K	×	Not available for the GOT3000 series. The setting is deleted.
Mitsubishi Electric India	MEI Nexgenie series	MEI Nexgenie	×	Not available for the GOT3000 series. The setting is deleted.
SICK	SICK Flexi Soft	SICK Flexi Soft	●	The setting is deleted. Configure the settings again in the GOT3000 series screen design software.

Manufacturer	Model	Driver	Schedule	Remarks
SIEMENS	SIEMENS S7-200	SIEMENS S7-200	●	The setting is deleted. Configure the settings again in the GOT3000 series screen design software.
	SIEMENS S7-300/400 series	SIEMENS S7-300/400	●	The setting is deleted. Configure the settings again in the GOT3000 series screen design software.
	SIEMENS S7(Ethernet)	Ethernet(SIEMENS S7), Gateway	×	Not available for the GOT3000 series. The setting is deleted.
ODVA	DeviceNet	DeviceNet	×	Not available for the GOT3000 series. The setting is deleted.
PROFIBUS	PROFIBUS DP	PROFIBUS DP	×	Not available for the GOT3000 series. The setting is deleted.

3.4 Specifications for GT SoftGOT and GT Simulator

Some functions of GT SoftGOT2000 and GT Simulator3 (2000) are not supported or are used differently.
For details, refer to the following.
☞ Page 17 Functions not supported by the GOT3000 series
☞ Page 34 Controller settings
○: Supported, ×: Not supported

Type	Function	GT SoftGOT2000GT Simulator3(2000)	GT SoftGOT3000GT Simulator3(3000)	Precautions for replacing GT SoftGOT2000 with GT SoftGOT3000
GT SoftGOT	License key	○	○	The license using the conventional USB key has been discontinued. The license is now registered through the GT SoftGOT3000 menu. Unlike a USB key, the license key cannot be replaced or carried. To use the software on another personal computer, purchase a license. For details, refer to the following manual. 📖GT SoftGOT3000 User's Manual
	CC IE Control connection	○	×	Not available for GT SoftGOT3000. (To be supported in the future)
	NET/H connection	○	×	Not available for GT SoftGOT3000. (To be supported in the future)
	OPC UA client connection	○	○	GT SoftGOT3000 does not support connection to multiple OPC UA servers. (To be supported in the future)
	PX Developer interaction function	○	×	Not available for GT SoftGOT3000.
	Edgecross interaction function	○	×	Not available for GT SoftGOT3000.
	PLC internal file information display	○	×	Not available for GT SoftGOT3000.
	GENESIS64/Basic SCADA interaction	○	×	Not available for GT SoftGOT3000.
	Script error information	○	×	Not available for GT SoftGOT3000. Use the SoftGOT diagnostics function.
GT Simulator	GX Simulator connection	○	×	Not available for GT Simulator3 (3000).

■How to specify the connection settings

In GT SoftGOT2000, connection settings are configured in the settings dialog of GT SoftGOT2000. However, in GT SoftGOT3000, connection settings must be configured in the project file in advance.
The settings configured in GT Designer3 are applied to GT SoftGOT3000 when a monitoring target project is opened.
For details on the setting method, refer to the following manual.
📖GT Designer3 (GOT3000) Screen Design Manual

3.5 Others

Manuals

The manual names and structure in the GOT3000 series manuals have been changed from those in the GOT2000 series manuals.

GOT2000 series manual	GOT3000 series manual
GT Designer3 (GOT2000) Screen Design Manual	GT Designer3 (GOT3000) Screen Design Manual
GOT2000 Series User's Manual (Hardware)	GOT3000 Series User's Manual (Hardware)
GOT2000 Series Connection Manual (Mitsubishi Electric Products) For GT Works3 Version1	GOT3000 Series User's Manual (Connection)
GOT2000 Series Connection Manual (Non-Mitsubishi Electric Products 1) For GT Works3 Version1	
GOT2000 Series Connection Manual (Non-Mitsubishi Electric Products 2) For GT Works3 Version1	
GOT2000 Series Connection Manual (Microcomputers, MODBUS/Fieldbus Products, Peripherals) For GT Works3 Version1	
GT SoftGOT2000 Version1 Operating Manual	GT SoftGOT3000 User's Manual
GOT2000 Series User's Manual (Utility)	GOT3000 Series User's Manual (Utility & Maintenance Functions)
GOT2000 Series User's Manual (Monitor)	

Revisions

Version	Issue date	Revision
A	January 2026	First edition

Trademarks

Microsoft and Windows are trademarks of the Microsoft group of companies.

Unicode is either a registered trademark or a trademark of Unicode, Inc. in the United States and other countries.

The company names, system names and product names mentioned in this technical bulletin are either registered trademarks or trademarks of their respective companies.

The names may not be marked with a trademark symbol (™ or ®) in this manual.